faru

PERMANENT ANCHORAGE SYSTEMS

3

Permanent anchor points
Anchor posts
Horizontal line systems
Horizontal rail systems
Vertical line systems
Vertical rail system
Safety ladders
Safety barriers
Skylight security system
Mobile man anchor

2022/23

PROTECT YOUR LIFE | USE IMAGINATION

Contents:

8 Introduction to fixed safety installations

15 Anchor points

22 Anchor posts

28 Anchor posts PROTON

38 PRIM

46 DUO

58 PROLINER

62 MONOLINE

68 TRASER

72 MARAN

78 SKC BLOCK

80 AC 360

88 AC 520

94 AC 510

98 PROSAFE

106 AT 242

108 Anchor mass

Devices and systems manufactured provide work safety in conditions where risk of fall from a height is present.

This equipment is used in many industries for works at a height, depth and in providing rescue services. Our offer includes both components of personal fall protection equip-ment – full body harnesses, energy absorbers, lanyards, and permanent anchorage systems, all included in this cata-logue. We pay special attention to comfort of use and reliability in functioning of our devices, making efforts to meet our customers' still growing needs as best as possible. All our products hold European cer-tificates of conformity and relevant approvals. For detailed, up-to-date functional and technical information, please contact the company's office or a technical and commercial consultant.

CLASSIFICATION OF ANCHORAGE SYSTEMS

Anchorage points and posts

Anchorage points	AT 150 AT 151 AT 152 AT 153	AT 180 AT 181 AT 183 AT 185 AT 187 AT 198
Anchor posts	HL700 HLB700 HLP700	PROTON1 PROTON2 PROTON4A,B,C,D PROTON5

Horizontal mobility

Line systems	System Prim System Duo System Monoline System Proliner
Rail systems	System Traser System Maran
Railings	System Prosafe

Vertical mobility

Line systems	SKC BLOCK AC 360
Rail systems	AC 520
Safety ladders	AC 510

Installing and servicing of anchorage systems

Customer who wishes to install an anchorage system on his/her site should first contact us technical and commercial consultant to discuss protection systems and obtain necessary data and materials, have a technical concept of protection system and an of-fer prepared. Then our consultant will draw technical concept for a protection system and send the Custom-er a trade offer. Following acceptance of conditions given the Customer should submit a written order for delivery of materials and installation. Once this order is received, our consultant contacts works coordinator on behalf of the Customer to settle the works schedule. The installed systems should be sub-ject to inspections carried out no less than once every 12 months by us or an authorized service point. For inspection and servicing, please contact our Servicing Department.

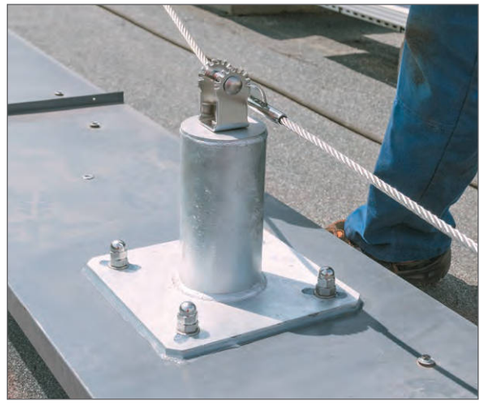

Permanent fall protection systems

Regulations and standards

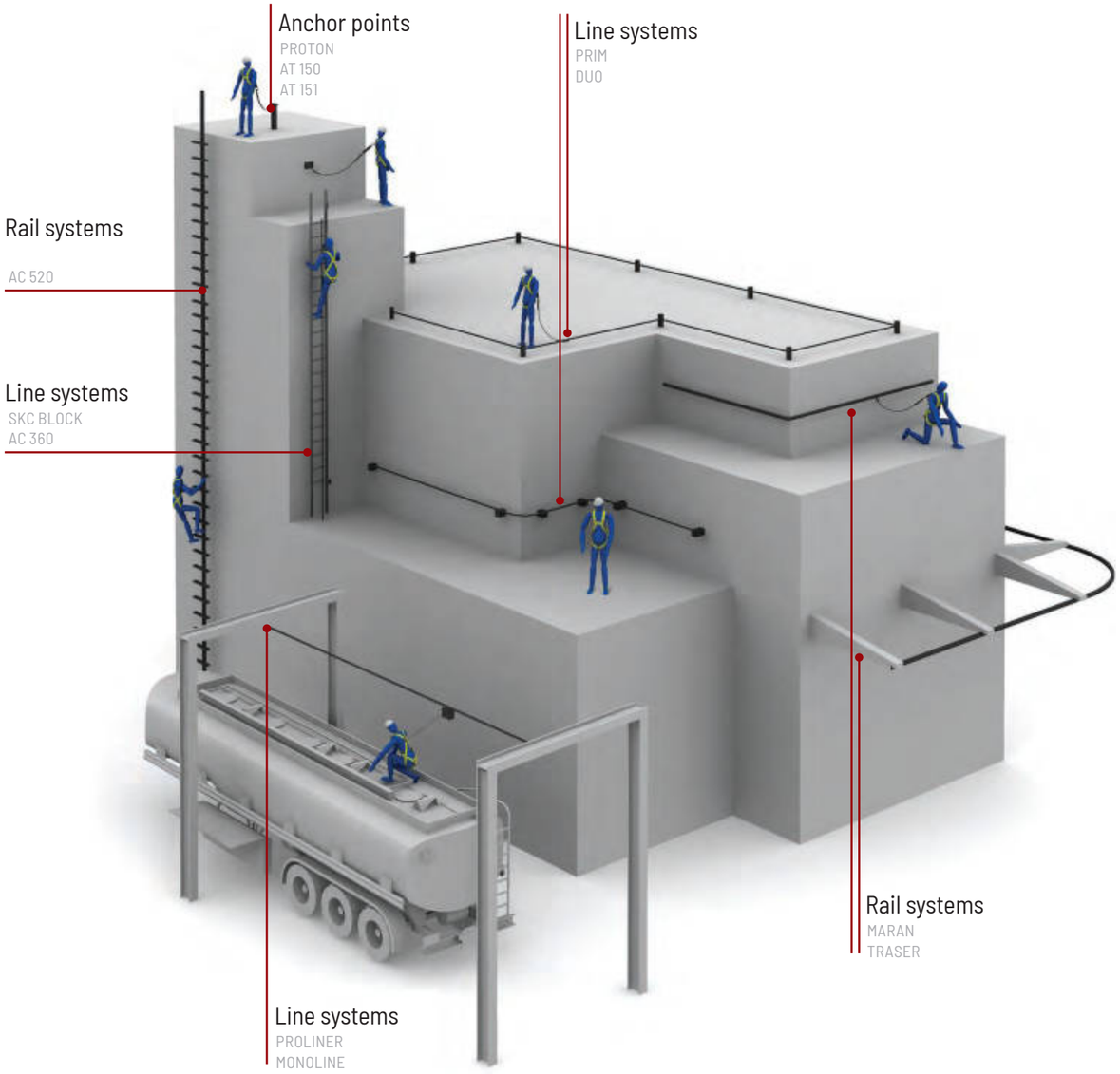

If no collective fall protection system is used on a site, the regulations stipulate to use personal fall protection equipment in combination with permanent anchorage systems designed so the user can reach work station and perform the job safely.

The user must be equipped with protective devices limiting maximum dynamic forces applied on the user while arresting a fall to maximum 6kN, according to EN 363 and EN 795.

Types of permanent fall protection systems

ANCHOR POINTS
Standards: EN 795:2012 CEN /TS1645:2013 Type A

Devices with fixed anchor points for one or more users fixed to a load-bearing structure.

HORIZONTAL LIFELINES
Standards: EN 795:2012 CEN /TS1645:2013 Type C

Devices with fixed anchor points for one or more users fixed to a load-bearing structure.

HORIZONTAL LIFELINES
Standards: EN 795:2012 CEN /TS1645:2013 Type C

Devices as a flexible anchor line tilted in relation to the horizontal by max. 15º, mounted on a load-bearing structure at both ends, and optionally in intermediate points along the anchor line. They enable the user to move horizontally along a track determined by flexible anchor line. Designed for one or more users.

HORIZONTAL ANCHOR RAILS
Standards: EN353-1:2014

Devices as a rigid anchor line tilted in relation to the horizontal by max. 15º and mounted on a load-bearing structure. They enable the user to move horizontally along a track determined by rigid anchor line. Designed for one or more users.

Verification of fall protection systems within laboratory testing

Regulations and standards

The PROTEKT products are subject to both static and dynamic testing.

Anchor devices are statically and dynamically tested in accordance with: EN 795:2012 and CEN /TS 16415:2013

Loads used during laboratory testing of anchor devices.			
Number of co-users	Static test	Dynamic test	Integrity test*
1 user	12 kN	Dynamic load of 100kg	3 kN
2 users	13 kN	Dynamic load of 200 kg	6 kN
3 users	14 kN	Dynamic load of 100kg + static load of 200kg	7,5 kN
4 users	15 kN	Dynamic load of 100kg + static load of 300 kg	9 kN

*) - integrity test is a static test carried out on the same sample, directly after the dynamic test.

Vertical anchor systems are statically and dynamically tested in accordance with: EN 353-1:2014

Loads used during laboratory testing of vertical anchor systems.		
Number of co-users	Static test	Dynamic test
1 user	15 kN	Dynamic load of 100kg**
2 users	16 kN	Dynamic load of 100kg** + static load of 100kg**

**) - devices for users with a weight of more than 100kg are tested by applying loads equal to maximum weight of the user.

Designing of systems General rules

A general algorithm for designing of permanent anchorage systems.

1 RISK ANALYSIS

- identification of places where a potential fall may occur
- size of free space in a place where a potential fall may occur
- expected climatic conditions when working

2 ANALYSIS OF GEOMETRY AND STRUCTURE

- shape of construction
- arrangement of load-bearing elements of a structure which may be used to fix a fall protection system

3 METHOD OF WORKING AND MOVING

- type of work performed
- moving routes
- place of access to permanent anchorage system
- frequency of work performed
- number of workers performing works at the same time

4 SELECTION OF TYPE OF ANCHORAGE SYSTEM

5 ARRANGEMENT OF ANCHORAGE SYSTEM ON SITE

6 VERIFICATION OF STRENGTH OF SYSTEM MOUNTING TO FIXED STRUCTURE

- determination of values of design loads acting on mounting
- checking of limit strength of mountings

General rules

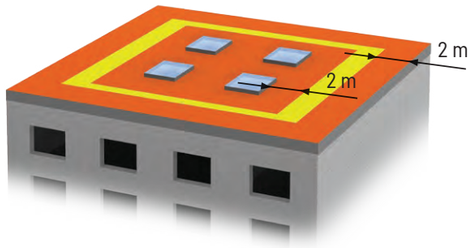

Potential place where a fall may occur:

- edge of roof,
- openings in roof and roof windows
- roof areas of a low strength

A higher risk is present over the whole area but the major danger is within approx. 2m from the above places.

- area of significant risk of a fall

ARRANGEMENT OF ANCHORAGE SYSTEM ON A FLAT ROOF

The best solution for all dimensions (x, y) of roof

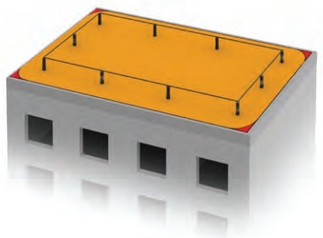

- advantage: the largest roof area "covered" by the system,
- potential disadvantage: may hamper removal of snow from the roof.

- area of significant risk of a fall
- area covered by anchorage system

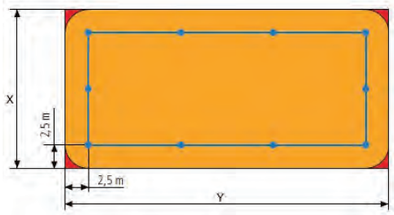

Alternative solution for dimensions x>20m; y>20m of roof

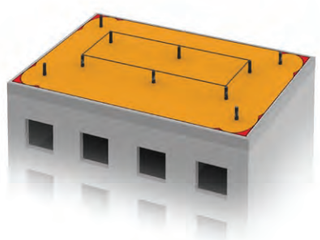

- requires additional anchor points on corners in order to extend the protected roof area,
- advantage: larger distance of the system from roof edge makes snow removal easier,
- potential disadvantage: larger distance of the system from roof edge requires use of a longer personal connecting component.

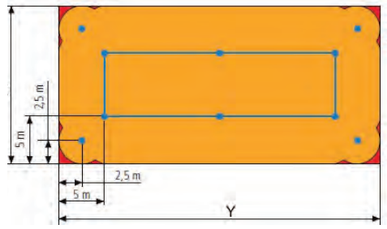

- area of significant risk of a fall
- area covered by anchorage system

Alternative solution for dimensions x<20m; y>20m of roof

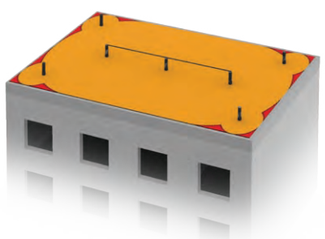

- the smallest area of roof covered by the system
- requires additional anchor points on corners in order to extend the protected roof area,
- advantage: single system line hampers removal of snow from the roof as least as possible,
- potential disadvantage: larger distance of the system from roof edge requires use of a longer personal connecting component.

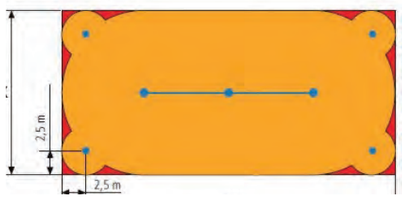

- area of significant risk of a fall
- area covered by anchorage system

ARRANGEMENT OF ANCHORAGE SYSTEM ON GABLE ROOF

Anchorage system as anchor points

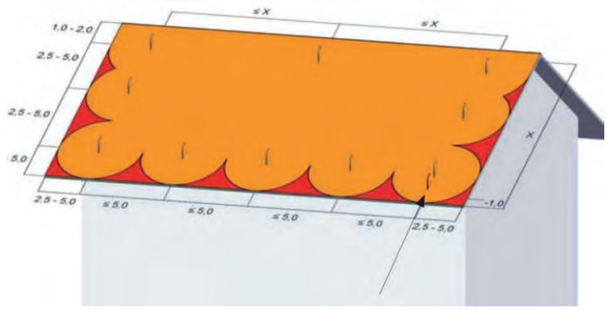

- Anchor points spaced every 2.5m to 5m along side edges and lower edge of the roof.

- Along the ridge anchor points are spaced at distances equal to or less than side edge of the roof.

- area of significant risk of a fall
- area covered by anchorage system

Anchorage system as a combination of anchor points and safety horizontal line.

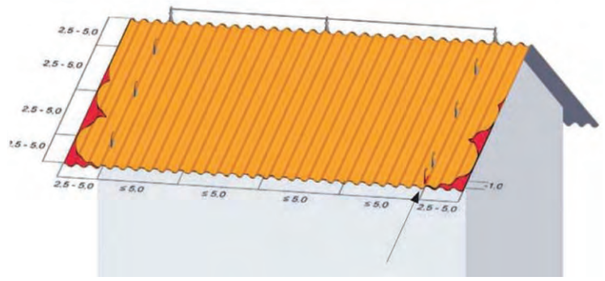

- Anchor points spaced every 2.5m to 5m along side edges of the roof.

- On the ridge safety horizontal line (or rail) is installed allowing for mobility along the roof.

- area of significant risk of a fall
- area covered by anchorage system

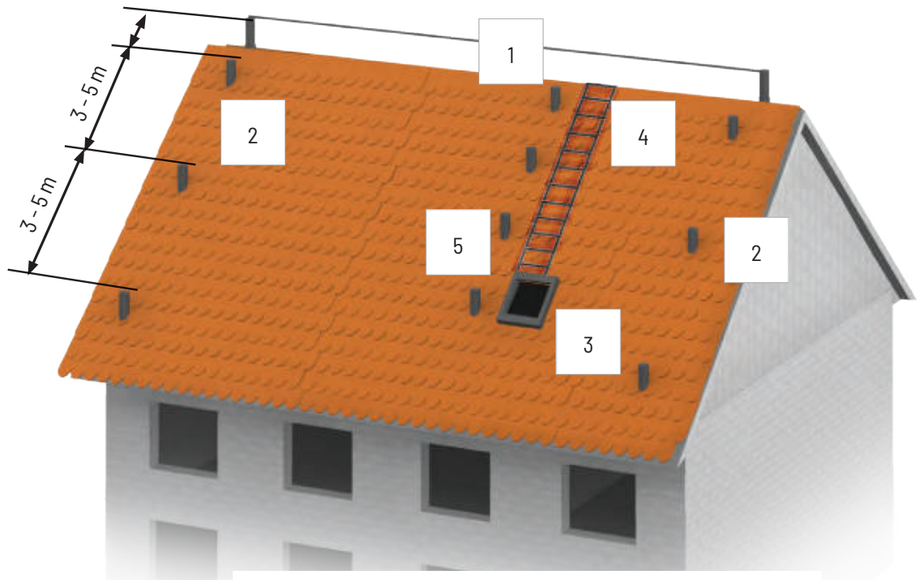

1 - Horizontal anchorage system as a main anchorage system on site
2 - Anchor points as protection of side edges of the roof
3 - Roof hatch
4 - Route to reach main anchorage system on the ridge
5 - Anchor points designed for protection when reaching the ridge

Design loads of anchor points

General rules

Design loads of anchor point mounting are determined based on the following formula:

$$F_k = x \cdot \left(F + \sum_{i=2}^{i=N-1} Q_i \right)$$

where: Fk - design load acting on anchor point
F - maximum dynamic force acting on anchor point when arresting a fall, F=6kN
Q - static load caused by users who fell and are suspended on an anchor device, Q=1kN for each suspended user
x - coefficient of load variability, x=1.5

Design loads for anchor points					
Number of co-users	Total load of anchor point [kN]		Coefficient of load variability		Design load
1 user	6	+	1,5	=	9
2 users	6 + 1	+	1,5	=	10,5
3 users	6 + 2	+	1,5	=	12
4 users	6 + 3	+	1,5	=	13,5

Methods of mounting of anchor points type - A

Connection to a concrete surface should be made using chemical or mechanical anchors with a tensile strength of min.12kN.

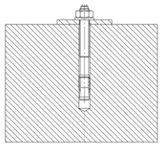

Mechanical anchor

Compressive strength of the surface should be min. 25MPa. Strictly follow recommendations for installation given by manufacturers of respective anchors.

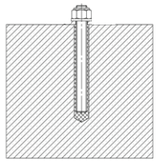

Chemical anchor

Methods of mounting of anchor points: HL 913

Polyamide sleeve is used to place anchor points in accordance with EN795: 2012 on concrete walls or steel constructions, on which additional heat or soundproofing insulation was performed. For proper insulation around the sleeve, it is recommended that it protrudes min. 20 mm above the insulation layer. Sleeves occur in lengths 20mm longer than the most popular dimensions of insulation layers thickness. It is allowed to use sleeve packing and joining them to obtain the appropriate length (sleeve with shorter length should be placed closer to the wall).

Avaliable lengtht:
20 cm, 70 cm, 120 cm, 170 cm, 220 cm

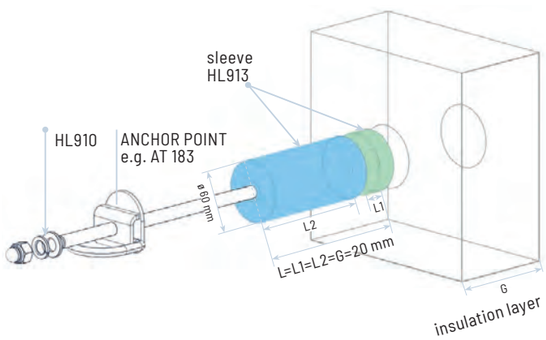

SET FOR ANCHORING THE ANCHOR POINT

HL 910

HL 913

Anchor points

AT 150

Anchor point made of aluminium alloy, designed for 1 user, fixed with 2 bolts or anchors M12.

- EN 795/Af
- 1 user
- made of aluminium alloy
- assembly by means of 2 M12 bolts/mechanical anchors
- ø hook hole 24 mm

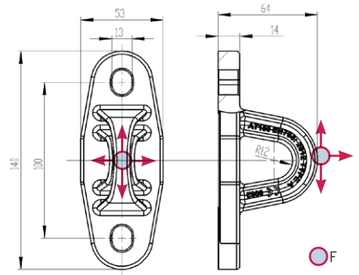

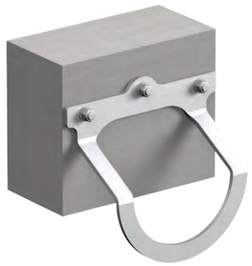

AT 151

Large-size anchor point made of stainless steel, designed for 1 user, fixed with 3 bolts or anchors M12. Particularly useful when personal fall protection equipment needs to be connected using a telescopic pole.

- EN 795/A
- 1 user
- made of stainless steel
- assembly by means of 3 M12 screws/mechanical anchors - ø hook hole 200 mm
- works well in combination with a telescopic pole

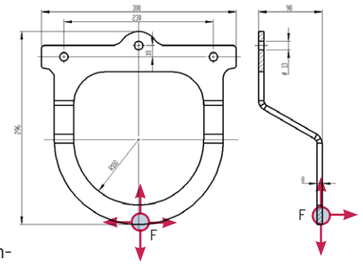

AT 153

Robust anchor point made of stainless steel, designed for 1 user, fixed with 2 bolts or anchors M12.

- EN 795/A
- 1 user
- made of stainless steel
- ø hook hole 60 mm

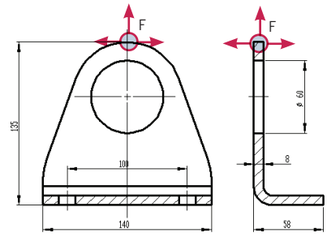

AT 180
AT 181

Minimum-size anchor point made of stainless steel, designed for 1 user, fixed with 1 bolt or anchor M12 (AT 180) or M10 (AT 181).

- Mounted using 2 M12 screws/mechanical anchors
- ø hook hole 60 mm

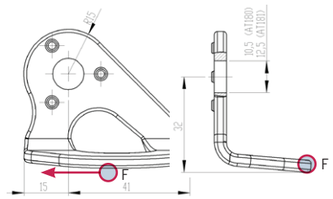

AT 183

Anchor point with locking clip, made of stainless steel, designed for 1 user, fixed with 1 bolt or anchor M12.

- EN795/A
- 1 user
- made of stainless steel
- assembly with 1 screw/mechanical anchor M1
- ø hook hole 18 mm

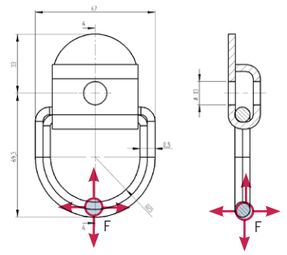

AT 152

Anchor point with movable locking clip, designed for 1 user.

FOR WIDER PRODUCT RANGE PLEASE REFER TO THE MAIN CATALOGUE.

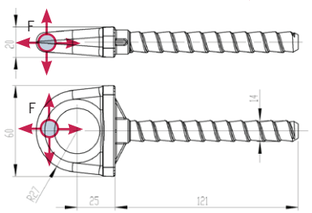

Protection for max 1 user

AT 020

L [mm]	X [mm]
180	43
200	63
220	83
240	103

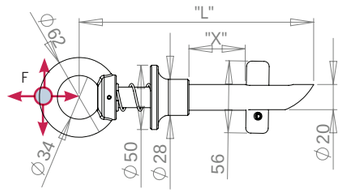

AT-020 anchor Point is an anchorage device type B, conform to the EN795: 2012 standard. It is designed for connecting a PPE system against fall from a height to a fixed construction. The AT-020 anchor post may be used by single user. The AT-020 is made of steel and aluminium alloy. The AT-020 anchorage point is intended for installation on a vertical, horizontal or inclined surface. It can be fasten to a fixed structure inside special preparde hole.

Protection for max 1 user

AT 021

The AT021 anchorage point is a component of fall protection equipment according to EN 795:2012 as type B anchorage device. It is used to connect a connecting and damping component (e.g. safety shock absorber with cable, self-locking devices, working ropes of self-locking sliding devices). The AT021 is a portable device and can only be installed in suitably prepared holes. The device is intended for use by a maximum of 1 person at a time.

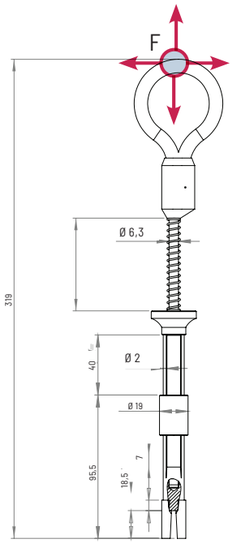

Protection for max 1 user

AT 021-T

The AT021-T anchorage point is a fall protection device according to EN 795:2012 as a type B anchorage device. It is used to connect the connection and damping element (e.g. safety damping with cable, self-locking devices, working lines of self-locking slide devices). The AT021-T is a portable device and can only be installed in suitably prepared holes. The technical opening has been additionally secured with a steel bail in 5 available colours. The device is designed for use by up to 1 person at a time.

AVALIABLE COLORS:

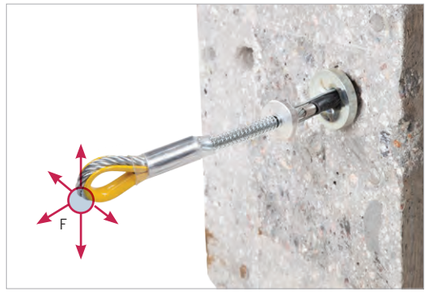

AT 024 - Anchor point

Maximum 2 users

The AT 024 plug-in anchor allows for effective anchoring of personal fall protection equipment to fixed structures. The basic components of the system are the lifting eye AT024-A and the socket AT024-B. All load-bearing parts of the anchor are made of stainless steel.
The lifting eye (AT024 A) is designed so that it can be removed from its socket (AT 024 B) at the press of a button and transferred to another socket.

The AT024-B sockets are permanently installed in a fixed structure. For mounting in a metal base, the AT024-D kit (nut with washer) is used. A single coupling eye can be connected to multiple sockets located in different parts of the building and removed after use. When not in use, the sockets are covered with the aesthetically pleasing end caps AT024-F.

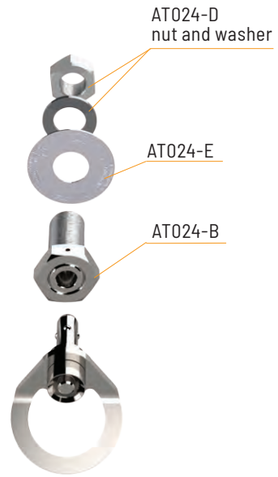

TECHNICAL DATA

- Max. number of simultaneous users: - 2 person
- Static strength: not less 13 kN.

STANDARDS:

- EN 795:2012 - type A
- CEN/TS 16415:2013-type A

Attachment to steel element

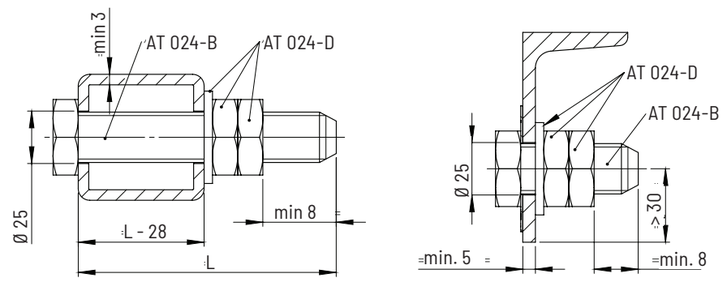

Attachment to concrete substrate

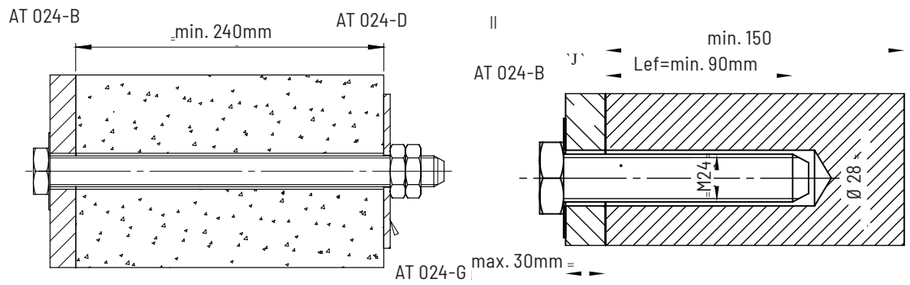

AT 185 - Anchor point

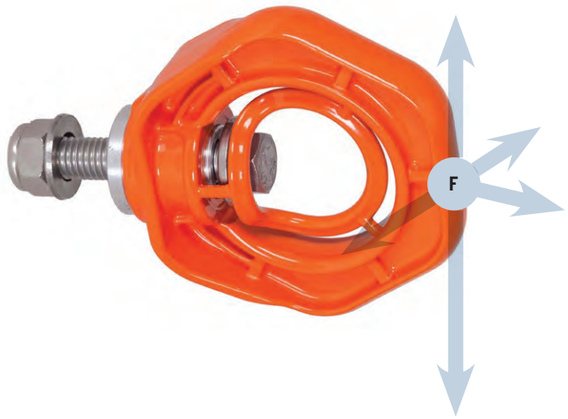

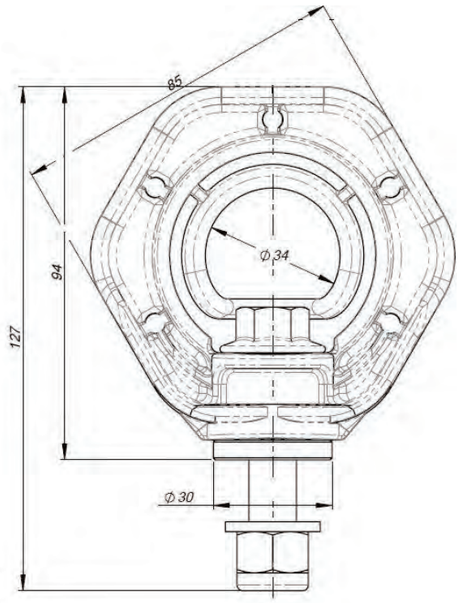

Protection for
max 3 users

DEVICE EQUIPPED IN FALL INDICATOR

The anchor point AT185 is an anchor device according to EN 795 type A and serves to protect three people at the same time. The AT185 anchorage point may only be used as personal protective equipment against falls from a height and cannot be used to lift loads. The device is made of AISI304 stainless steel casting and an aluminium sleeve on which the device can be freely rotated. According to EN 795:2012 type A, the static strength of this point is min. 14 kN. The user must be provided with an element limiting the maximum dynamic forces acting on him/her during the fall arrest to a maximum of 1,5 m/s. The user must be provided with an element limiting the maximum dynamic forces acting on him/her during the fall arrest.

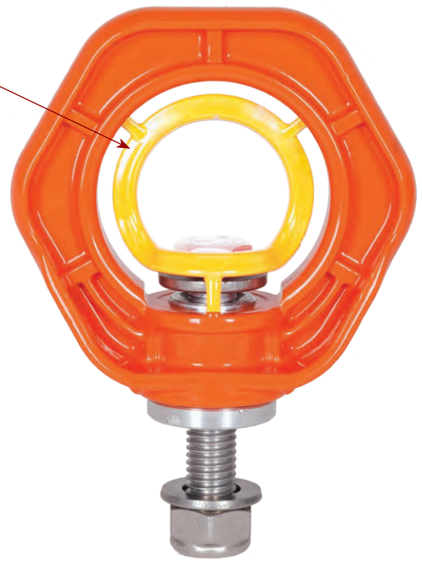

STANDARDS:
- EN 795:2012 - type A

TECHNICAL DATA
- Max. number of simultaneous users: - 3 person
- Static strength: not less 14 kN.

AT 187 - Anchor point

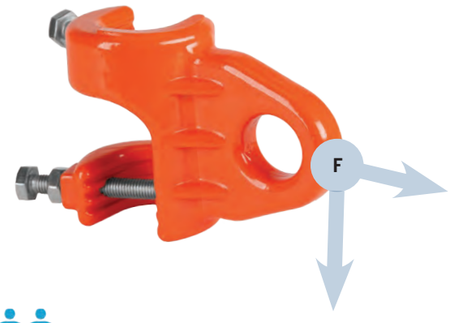

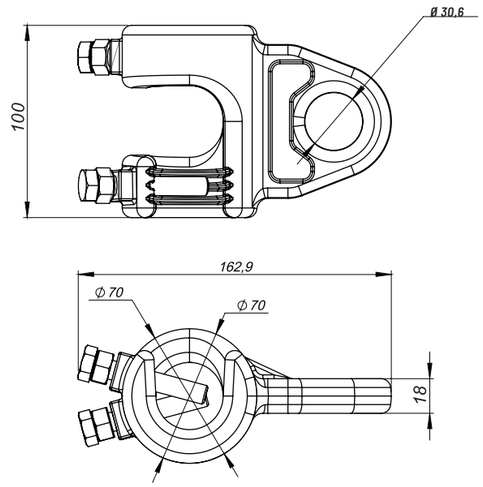

Protection for
max 3 users

The AT187 anchor point is a type B anchor device according to EN 795 and serves to protect three people working at the same time. The AT187 Anchorage Point may only be used as personal protective equipment against falls from a height and cannot be used to lift loads. The device is made of steel. The strength of this point is min. 30 kN. The device is designed to be installed on a ribbed rod with a core diameter of up to 32 mm.

EXAMPLE OF MOUNTING AN ANCHOR POINT ON A VERTICAL BAR

1.

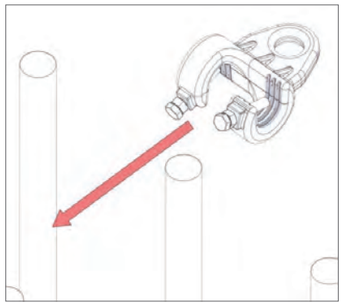

2.

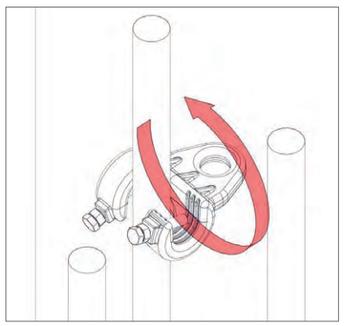

STANDARDS:
- EN 795:2012 - type A

TECHNICAL DATA
- Max. number of simultaneous users: - 3 person
- Static strength: not less 30 kN.

AT 020 - Anchor point

AT-020 anchor point is an anchorage device type B, conform to the EN795: 2012 standard. It is designed for connecting a PPE system against fall from a height to a fixed construction. The AT-020 anchor post may be used by single user. The AT-020 is made of steel and aluminium alloy. The AT-020 anchorage point is intended for installation on a vertical, horizontal or inclined surface. It can be fasten to a fixed structure inside special preparde hole.

L [mm]	X [mm]
180	43
200	63
220	83
240	103

AT 020

Maximum
1 user

Dimensions

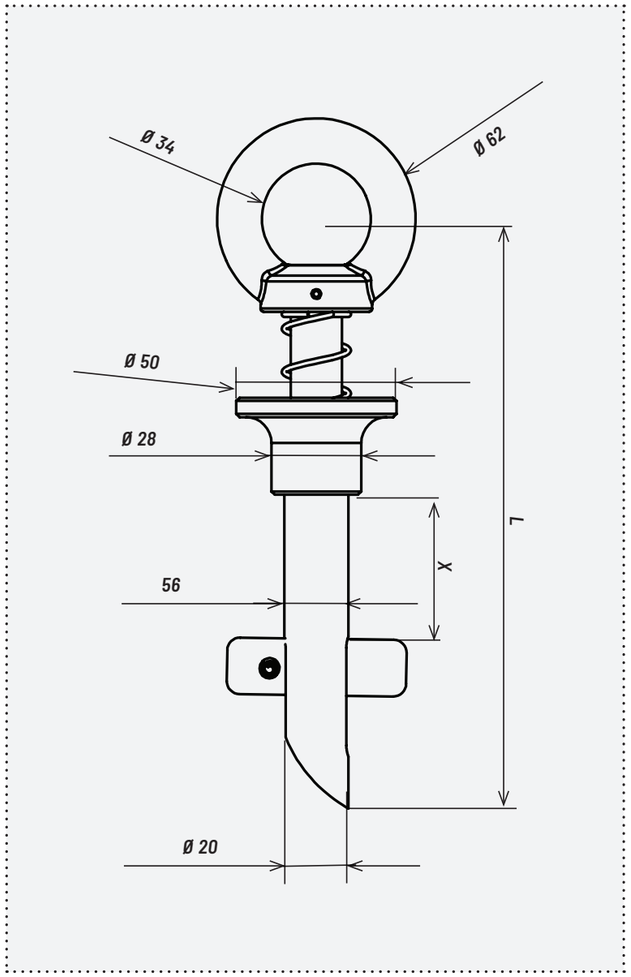

AT 021 - Anchor point

The AT021 anchorage point is a component of fall protection equipment according to EN 795:2012 as type B anchorage device. It is used to connect a connecting and damping component (e.g. safety shock absorber with cable, self-locking devices, working ropes of self-locking sliding devices). The AT021 is a portable device and can only be installed in suitably prepared holes. The device is intended for use by a maximum of 1 person at a time.

AT 021

Maximum
1 user

Dimensions

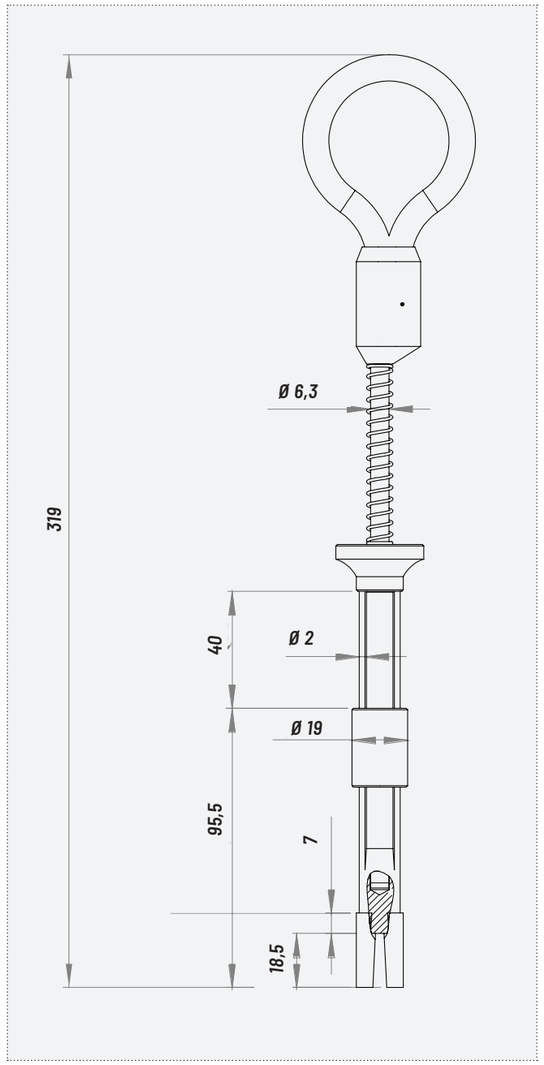

AT 198

EN 795/A, CEN/TS 16415:2013

Anchorage point for trapezoidal metal sheet

Protection for up to 3 persons

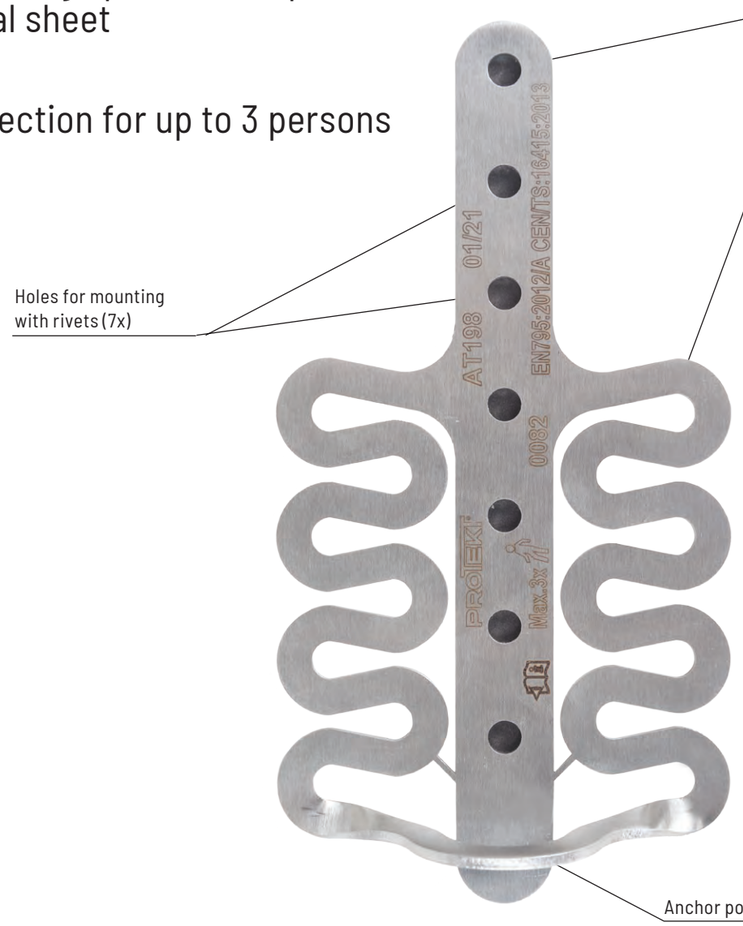

- EN 795/A CEN/TS 16415
- 3 users
- made of stainless steel
- fitting with 7 rivets (included)
- anchor hole ø 34.9 mm
- the shock absorber protects the roof structure when stopping a fall
- the shock-absorber is not part of the individual equipment

Installation

The kit includes an 7 rivets for trapezoidal sheet.

Trapezoidal sheet

- over 0.5 mm for steel sheet
- over 0.7 mm for aluminum sheet

Installation kit

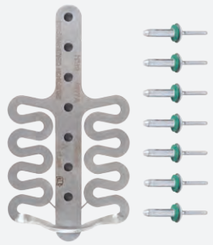

The kit includes an AT 198 point and 7 rivets for trapezoidal sheet.

Mounting to metal sheet

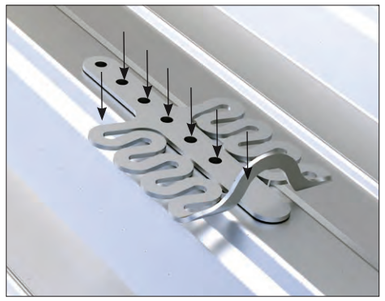

1. Place the point on the trapezoidal sheet in the upper „wave" of the sheet and using a drilling machine make 7 Ø8mm holes, drilling through the mounting holes in the point.

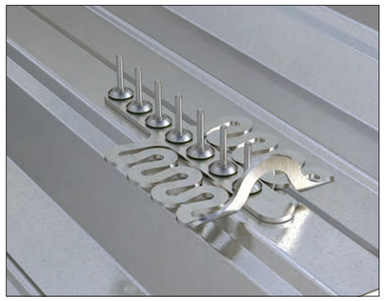

2. Then insert 7 rivets through the mounting holes at the anchor point and the holes made in the trapezoidal sheet.

3. Rivet the rivets using a riveting tool.

Dimensions

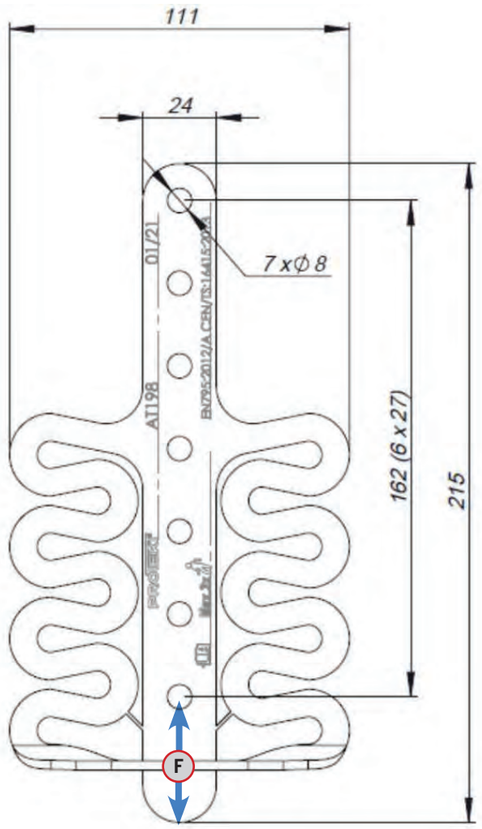

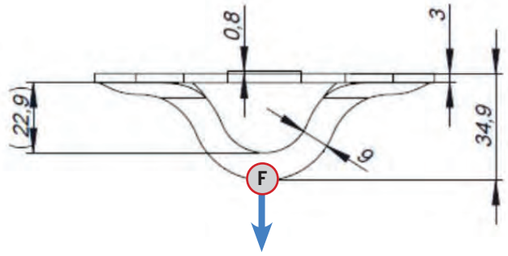

Material:	Stainless steel
Strength:	14 kN
Number of users:	max 3 persons

Protection for max 3 users

Anchor points

HL 700

EN 795/A, CEN/TS 16415:2013

Anchor post for trapezoidal sheet metal.
Protection for up to 3 persons.

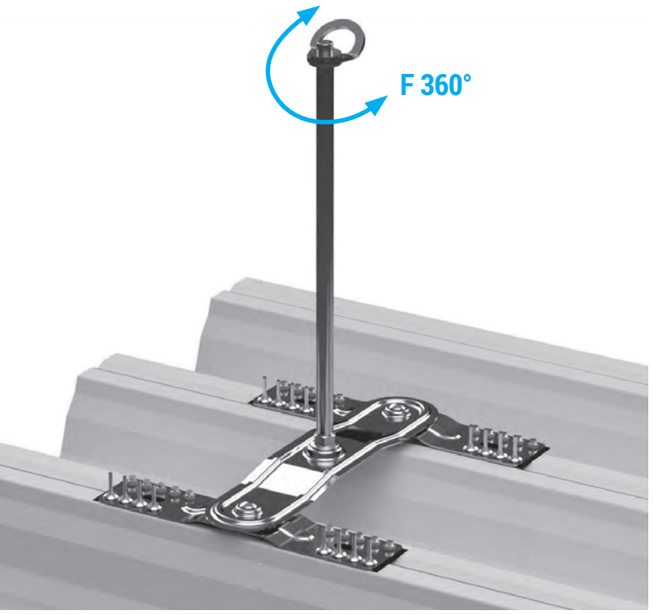

Material	stainless steel
Dimensions	513 x 415 x 375 mm
Bore diameter of the catch point Ø	45 mm
Spacing max.	340 mm

Protection for
max 3 users

Dimensions

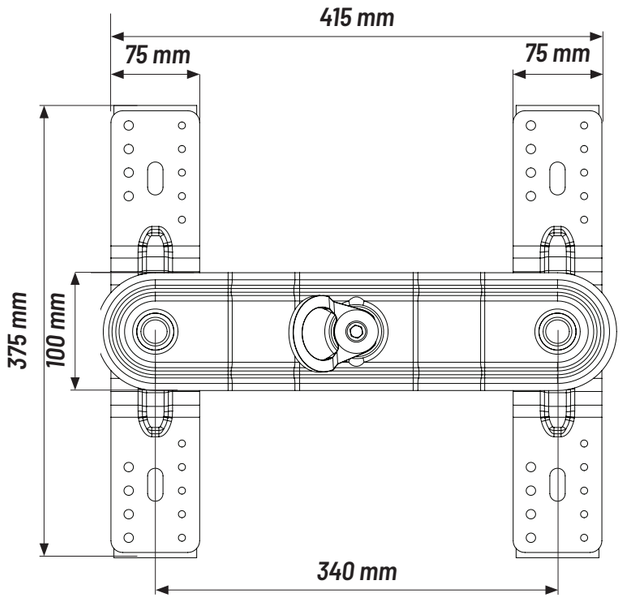

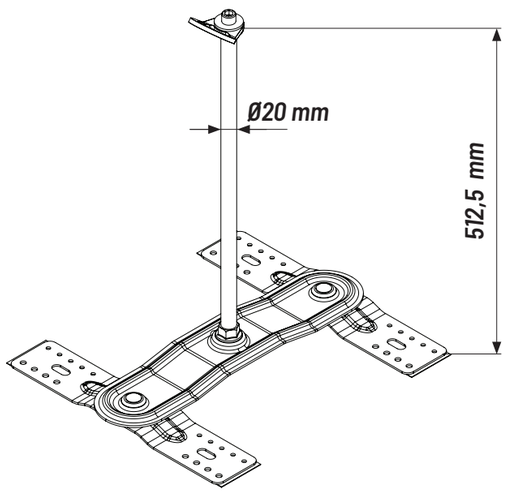

Anchor points

Nr Kat.: HL 700 102

FOR SHEET METAL 05 - 0,63 MM

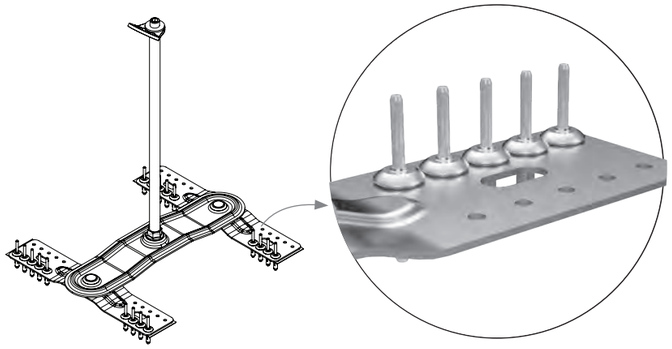

THE SET INCLUDES:

- **x2** *locking bolt M8x20*
- **x1** *anchor rod*
- **x1** *fixed plate*
- **x2** *swivel plate*
- **x1** *anchor point*
- **x16** *8 mm blind rivet*

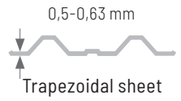

Nr Kat.: HL 700 101

FOR SHEET METAL THICKER THAN 0.63 MM

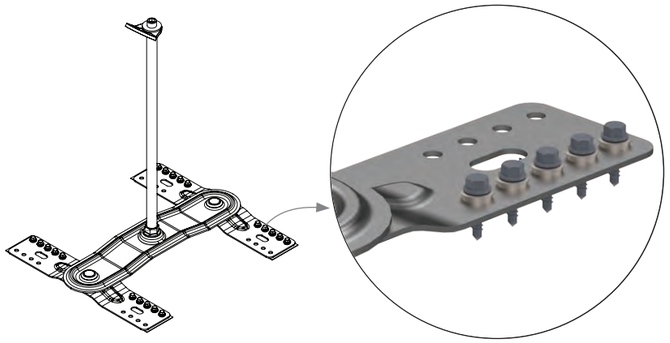

THE SET INCLUDES:

- **x2** *locking screw M8x20*
- **x20** *sealing screw 5.5x25*
- **x1** *anchor rod*
- **x1** *fixed plate*
- **x2** *pivot plate*
- **x1** *anchor point*

Nr Kat.: HL 700 103

FOR CONCRETE

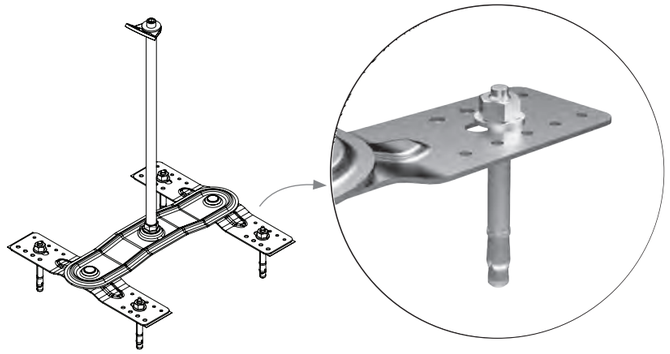

THE SET INCLUDES:

- **x2** *locking screw M8x20*
- **x1** *anchor rod*
- **x1** *fixed plate*
- **x2** *swivel plate*
- **x1** *anchor point*
- **x4** *mechanical anchor*
  HILTI HST2 M12x115/8 mm

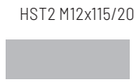

HLB 700

EN 795/A, CEN/TS 16415:2013

Universal anchor post.

HLB 700

Assembly for concrete

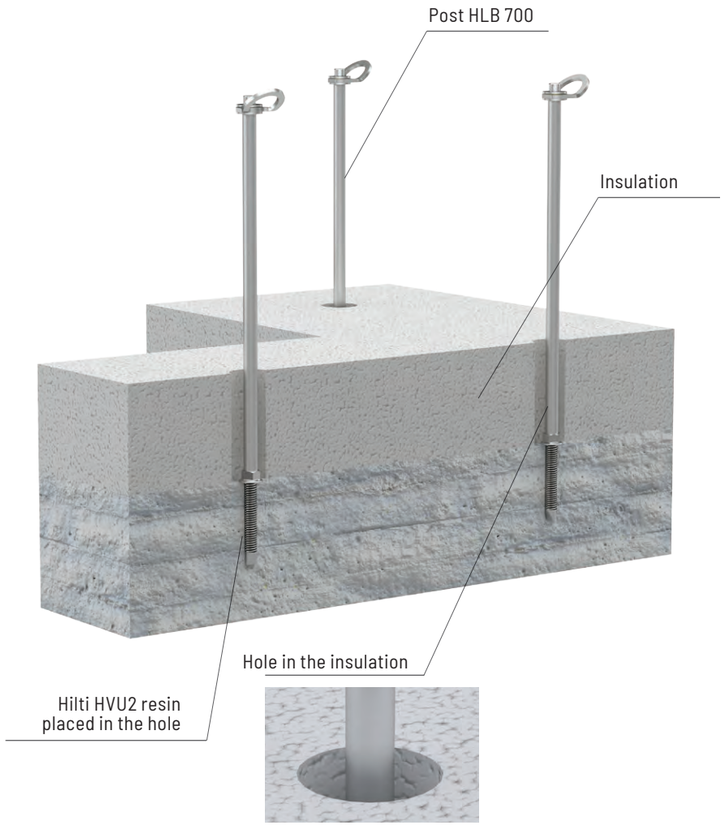

Assembly for steel structure

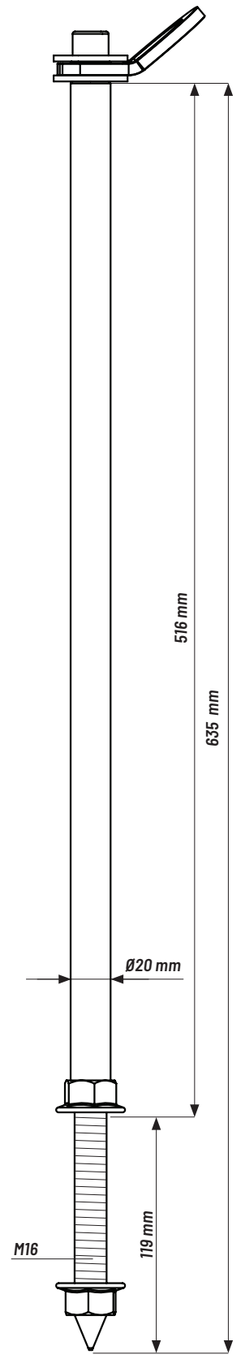

Mounting

1.

2.

3.

4.

Material	stainless steel
Static strength	14 kN
Bore diameter of the catch point Ø	45 mm
Max. number of users	3

Assembly takes place with a screwdriver by rotating the rod in the chemical resin until it is pressed into the nut itself.

Protection for max 3 users

Anchor posts
Anchor points

Anchor points

HLP 700

EN 795/A, CEN/TS 16415:2013

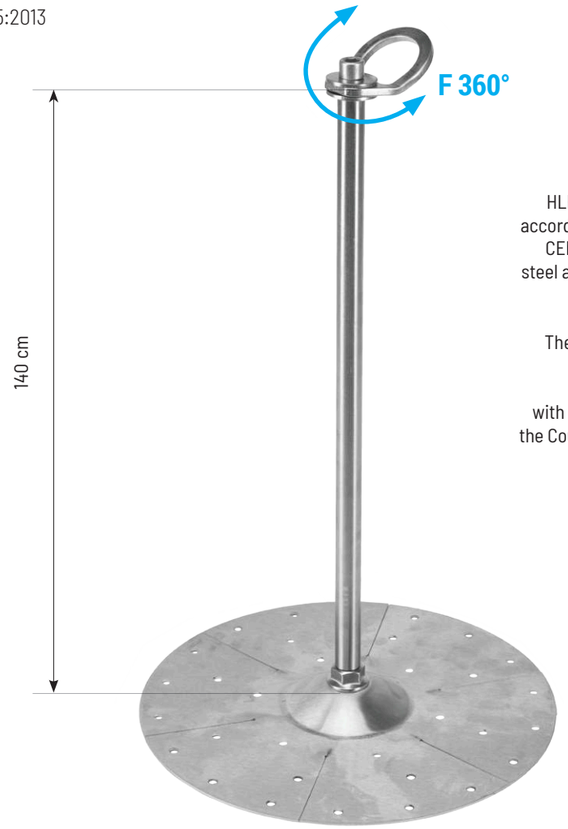

Universal post belaying post for wood

HLP 700 is an anchor post which is an anchor device according to EN795:2012 type A and CEN/TS/16415:2013. CEN/TS/16415:2013 The HLP 700 is made of stainless steel and is designed for 3 users working simultaneously, with a static strength of min. 14 kN.

The post is designed to be fixed to OSB panels with a thickness of min. 12 mm by means of screws JT3-ST-2-6,0 x 35 HLP 700 is according to with the Regulation of the European Parliament and of the Council (EU) of 9 March 2016 on protective measures 2016/425.

Mounting

Anchor point

SET CONTAINS:

- y x32 JT3-ST-2-6,0 x 35
- y x1 Rotating anchor point
- y x1 Post top plate

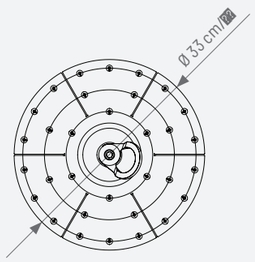

Mounting
on the plate OSB

Material	stainless steel
Dimensions	500 x 330 x 330 mm
Static strength	14 kN
Bore diameter of the catch point Ø	45 mm
Max. number of users	3

Protection for
max 3 users

Anchor points

HLH 700

EN 795/A, CEN/TS 16415:2013

Universal achor post for trapezoidal sheet metal

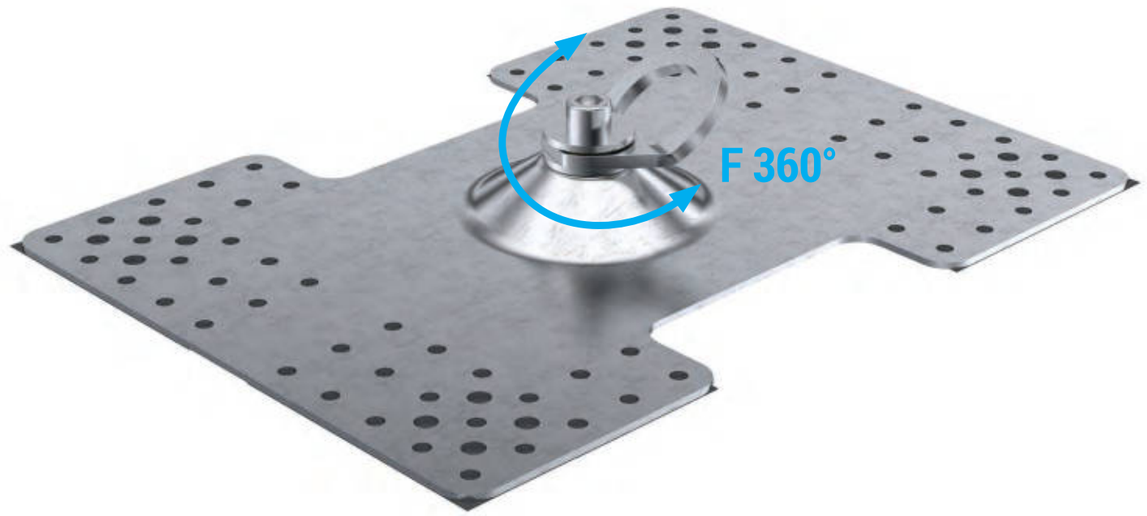

Versions

Anchor point

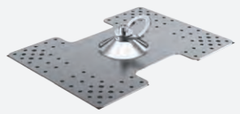

SET CONTAINS:

- y x1 Rotating anchor point
- y x1 Post top plate

Assembly kit for sheet thicker than 0,63 mm

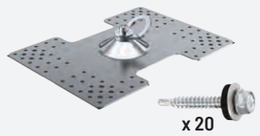

SET CONTAINS:

- y x20 Screw with seal 5,5x25 mm
- y x1 Rotating anchor point
- y x1 Post top plate

Assembly kit for sheet thicker than 0,5 mm

SET CONTAINS:

- y x8 Tight blind rivet 7 mm
- y x1 Rotating anchor point
- y x1 Post top plate

Material	stainless steel
Dimensions	375 x 275 mm
Static strength	30 kN
Bore diameter of the catch point Ø	45 mm
Max. number of users	3

Protection for
max 3 users

Anchor posts PROTON

Anchor points

PROTON 1

PROTON 5

PROTON 1 and PROTON 5 are rigid posts made of hot-dip galvanized steel, equipped with a swivel plate with three points for connection of personal fall protection equipment. Designed for 3 co-users.

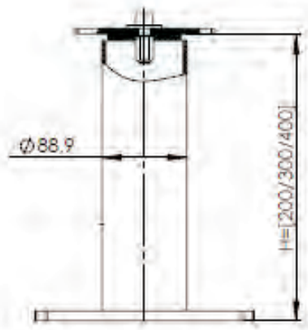

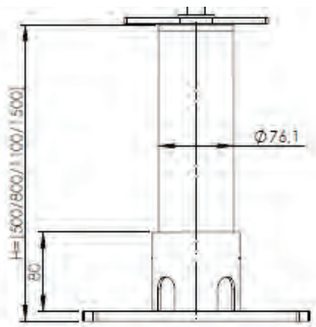

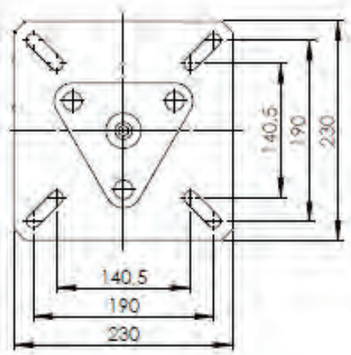

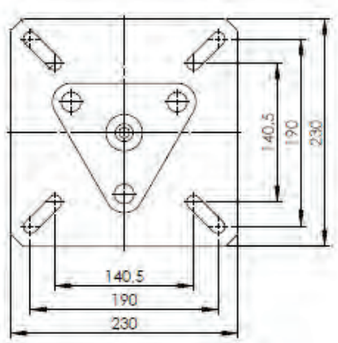

PROTON 1 and PROTON 5 Installation examples

Anchor points

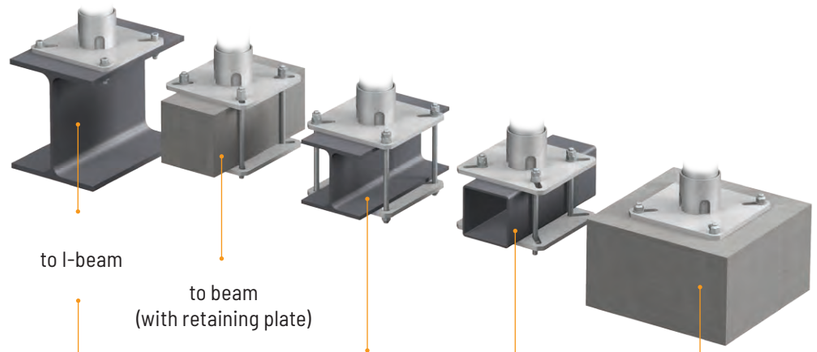

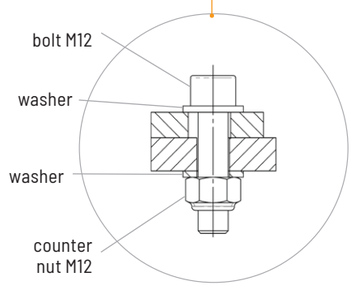

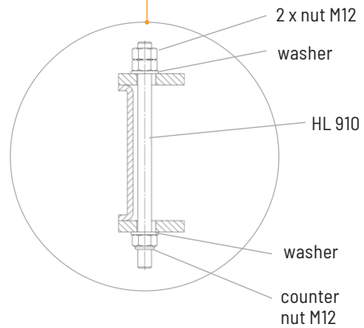

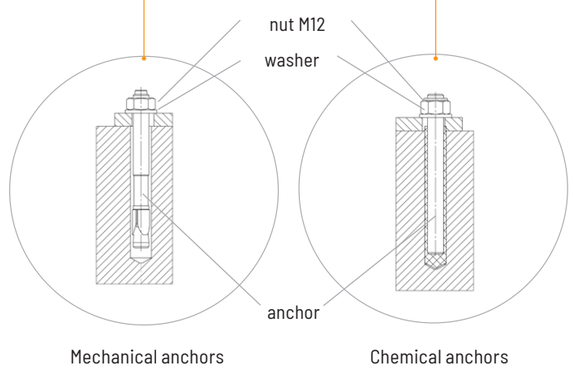

Anchor points

EN 795/A, CEN/TS 16415:2013

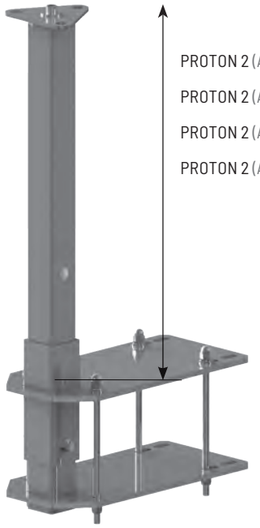

PROTON 2 (A/B) 1400	**140 cm**
PROTON 2 (A/B) 1100	**110 cm**
PROTON 2 (A/B) 800	**80 cm**
PROTON 2 (A/B) 500	**50 cm**

Protection for max 3 users

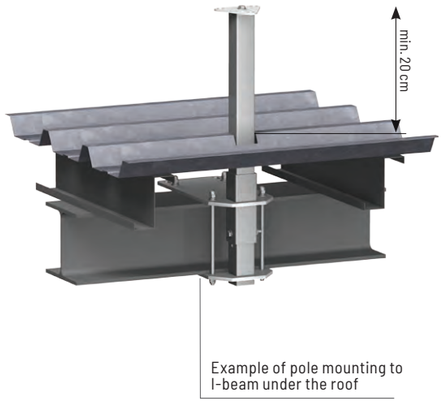

Example of pole mounting to I-beam under the roof

PROTON 2

(fixing to roof beam by means of stop plates)

PROTON 2 is a rigid post made of hot-dip galvanized steel, equipped with a swivel plate with three points for connection of personal fall protection equipment. Designed for 3 co-users. PROTON 2 allows for a special method of mounting to a roof beam side.

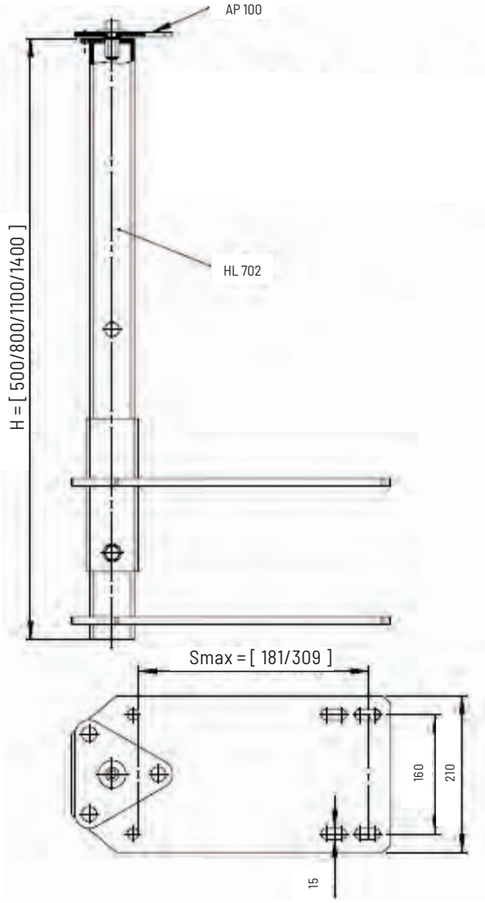

A

B

B

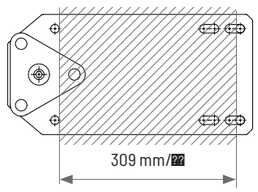

A

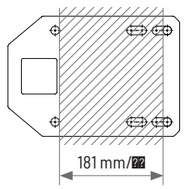

Anchor points

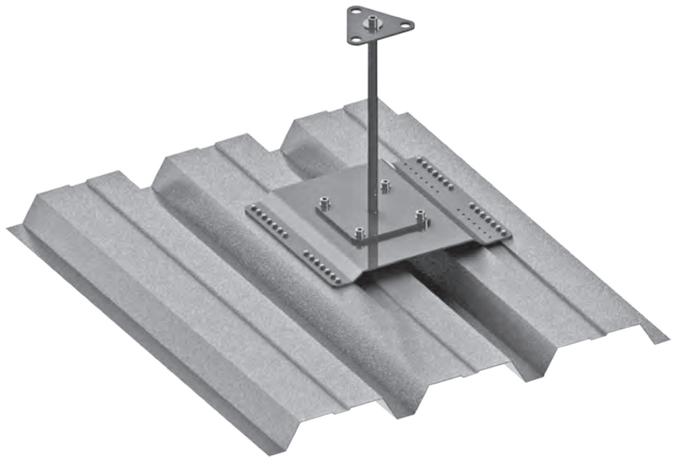

PROTON 4

(fixing to trapezoidal sheet metal)

Protection for max 3 users

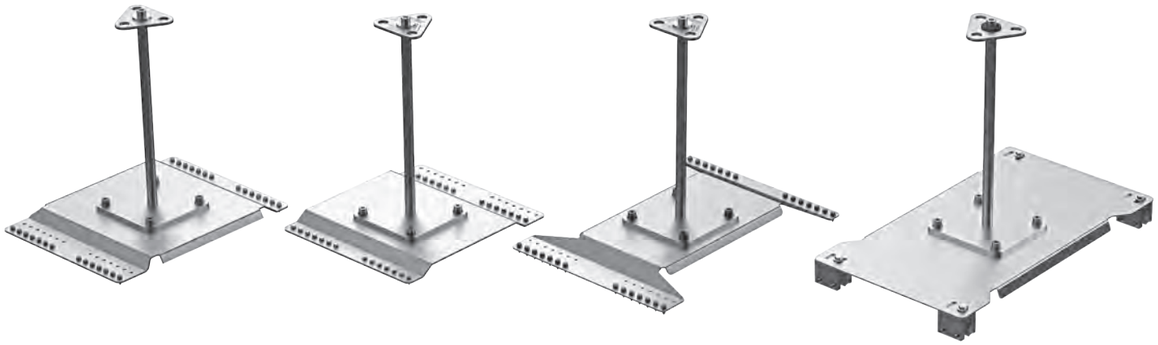

PROTON 4A | PROTON 4B | PROTON 4C | PROTON 4D

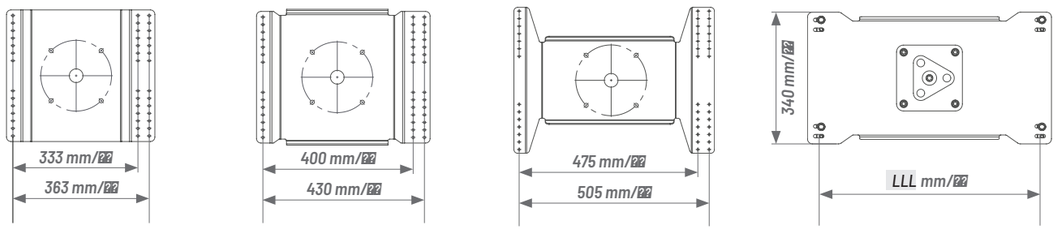

PROTON 4 is an anchor post made of stainless steel, equipped with a swivel plate with three points for connection of personal fall protection equipment. Designed for 3 users. PROTON 4 allows for installation directly to steel sheet roofing, if the sheet is an outer cover, and also if covered with an insulation material. With various configurations of the post the product can be used for a wide range of metal sheet profiles, and also standing seam roofing.

Anchor points

Table of compatibility of PROTON 4 post variants and types of trapezoidal sheet

Type of trapezoidal sheet	Sheet position	Type of post suitable for sheet	Type of trapezoidal sheet	Sheet position	Type of post suitable for sheet
Hacierco 40/160	Positive	A	HACIERCO 94/255	Positive	A
		C			B
	Negative	A			C
		C		Negative	C
Hacierco 40/183	Positive	A	HACIERCO 135/135	Positive	A
		B			B
		C		Negative	A
	Negative	A	HACIERCO 136/310	Positive	A
Hacierco 50/265	Positive	C			B
	Negative	C		Negative	A
Hacierco 50/260	Positive	A	HACIERCO 145/280	Positive	A
		C			C
	Negative	C		Negative	A
HACIERCO 60/235	Positive	A	HACIERCO 150/280	Positive	A
		C			C
	Negative	C		Negative	n/a
HACIERCO 70/200	Positive	A	HACIERCO 160/250	Positive	A
		B			C
	Negative			Negative	C
		B	HACIERCO 160/260N	Positive	A
HACIERCO 80/280	Positive	A			C
		C		Negative	C
	Negative	A	HACIERCO 200/420-2T	Positive	A
HACIERCO 84/273	Positive	A			B
		C			C
	Negative	Brak rozwiązania		Negative	B
HACIERCO 90/262,5	Positive	A			
		C			
	Negative	C			
HACIERCO 94/305	Positive	A			
	Negative	A			

Anchor points

Type of trapezoidal sheet	Sheet position	Type of post suitable for sheet	Type of trapezoidal sheet	Sheet position	Type of post suitable for sheet
T50P	Positive	A	T92P	Positive	B
	Negative	C		Negative	A
T55P	Positive	A	T130	Positive	A
		B			B
		C		Negative	A
	Negative	C			B
T60P	Positive	C	T135P	Positive	A
	Negative	C		Negative	A
T80	Positive	A	T150	Positive	A
		C		Negative	A
	Negative	A	T160	Positive	A
		C			C
T92P	Positive	A		Negative	C

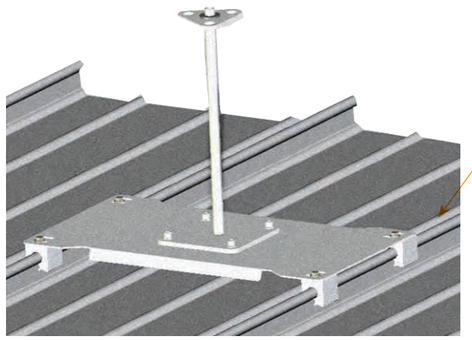

PROTON 4

(mounting to standing seam)

S5_ - types of clamps depending on the type of seam

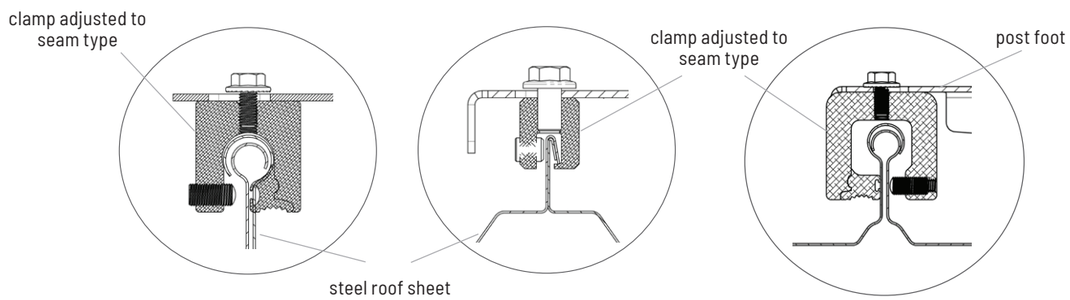

Line systems Design parameters

Line systems

For horizontal lifelines, two design parameters are defined - forces loading system mountings to load-bearing structure (intermediate and final structural anchor points) Fk and Fp and line deflection D (Fig.).

These parameters depend on:
- system geometry, i.e. total length - L and distance between intermediate mountings - S
- expected load of the system when arresting a fall, resulting from the number of co-users of the system - N
- characteristics (force - deformation) of the system components which determine its susceptibility (formability) under a load.

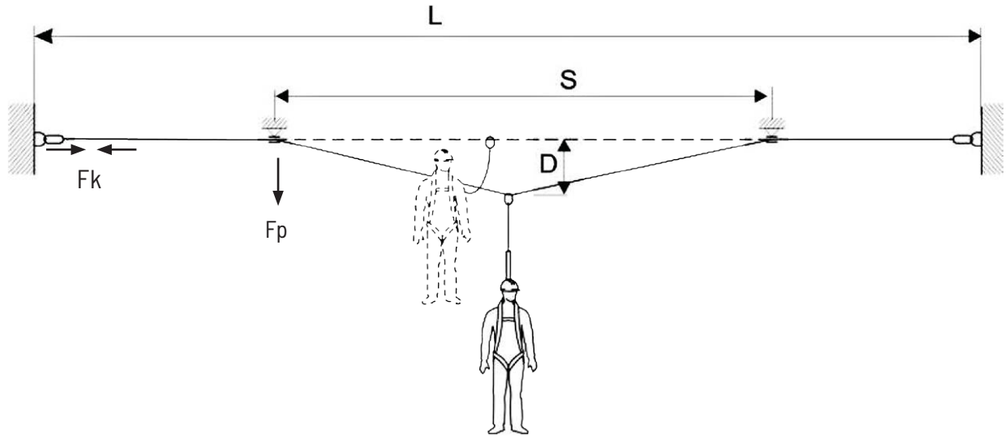

Strength of load-bearing structure and system mountings to load-bearing structure should meet the following conditions:

Rk ≥ 2 x Fk

Rp ≥ 2 x Fp

Values Fk, Fp and D are determined theoretically and verified through laboratory testing or only experimentally within laboratory testing. Example values Fk, Fp and D are given in pages presenting particular products. For designing of functional systems, to determine forces "Fk" and "Fp" and deflections "D" specialised software dedicated specially for PROTEKT products, is used.

Dialog box of software used to determine forces and deflections in line anchorage system

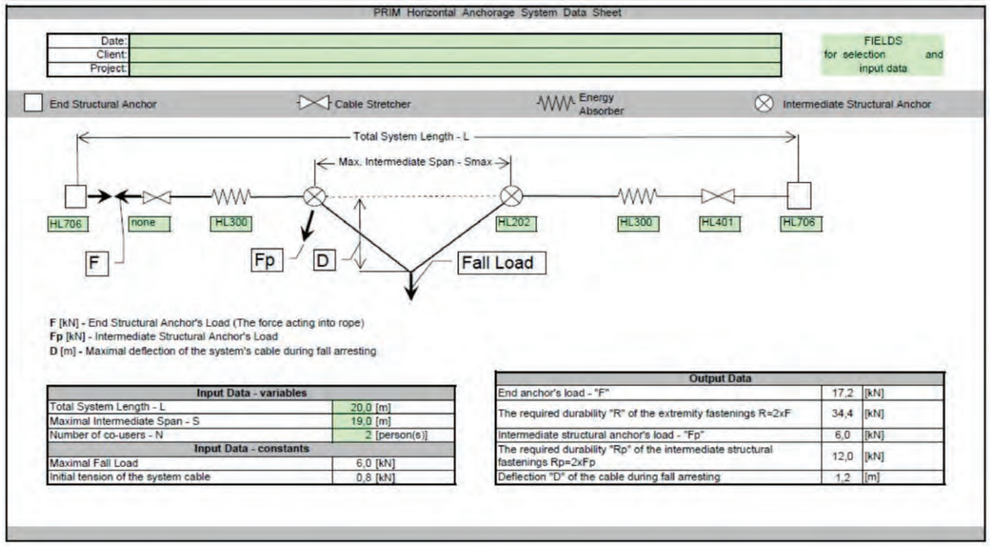

PRIM

Horizontal anchor system with anchor line

7 MAXIMUM USERS

Line anchor system PRIM is a C class anchor device conforming to EN 795 and CEN /TS16415. The system is designed for use by a group of up to 3 users at the same time, and can be re-configured to provide protection for a larger group of up to 7 users. It can be installed on building walls, structures and on roofs or terraces, etc. It comprises the following types of components

- end structural anchor elements such as end plates or posts;
- intermediate structural mounting elements such as line holders or line return rolls;
- energy absorbers and line tensioning elements;
- connecting elements;
- line being a guide for mobile anchor points.

The system is made of stainless steel (cable, energy absorbing and connecting components) or galvanized steel (selected fastening elements). It is equipped with end and intermediate anchor points of anchor line and fall arrester which reduce loads transferred on the structure.

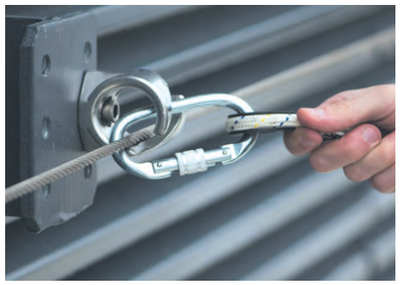

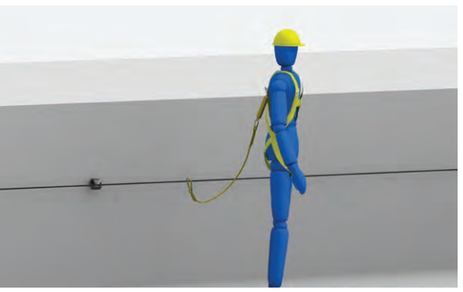

Stainless-steel two-point mounting plate. For mounting line ends. Recommended for steel or strong concrete surfaces.

HL101

Stainless-steel three-point mounting plate. For mounting line ends. Can be used on any surface type.

HL102

Intermediate line holder. Made of stainless steel.

H202

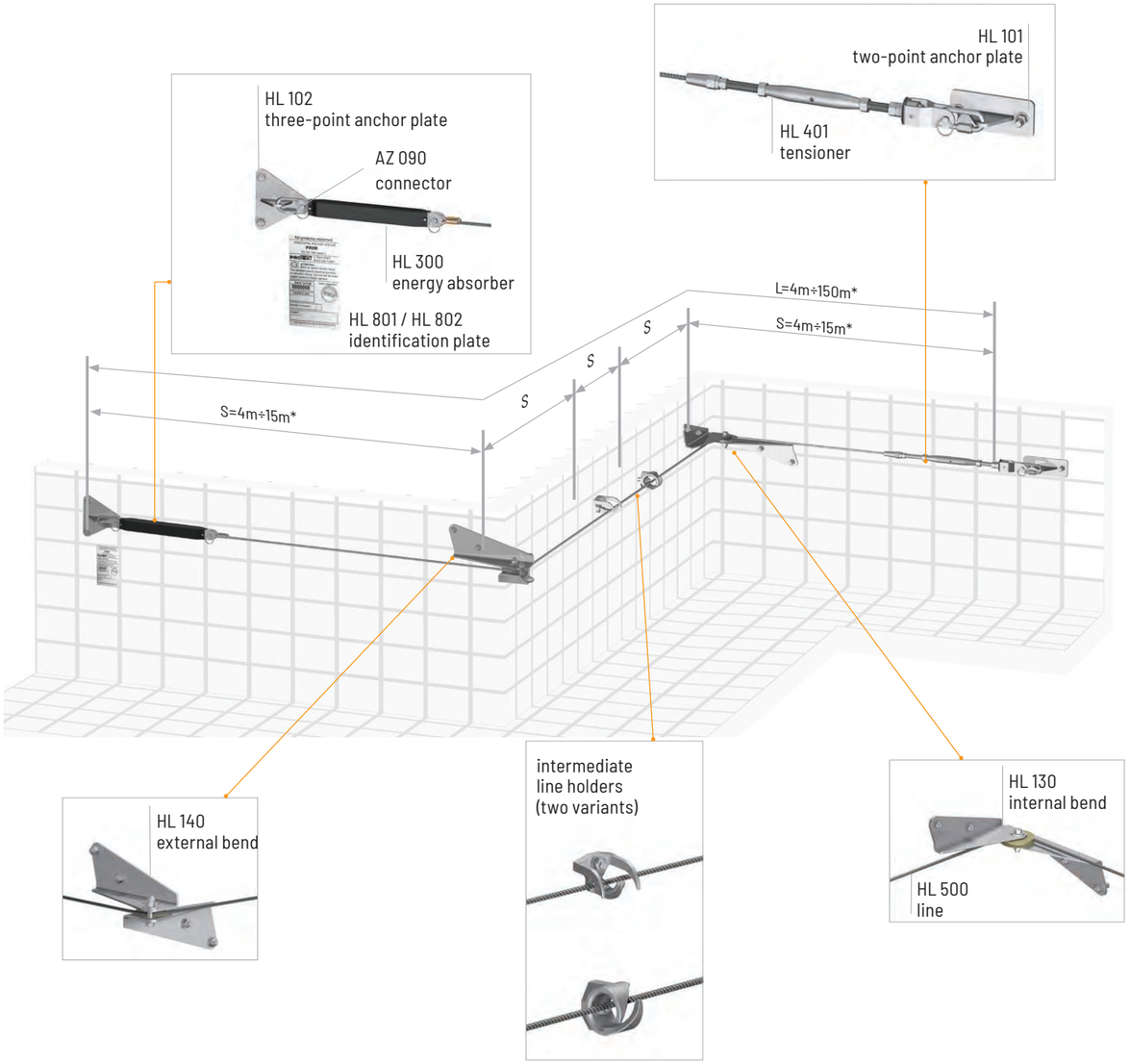

Values of force F transferred on lifeline [kN]*

Total length of system [m]		15	50	100
Span length [m]	5	11,3	9,3	7,8
	15	15,3	11,5	9,8

Values of deflection D of lifeline [m]*

Total length of system [m]		15	50	100
Span length [m]	5	0,5	0,5	0,6
	15	1,1	1,1	1,1

*special solutions may include other length (for more information please contact our representatives). ** given indicative values and cannot be used for system design

Post made of hot-dip galvanized steel.
Height: 200mm; 300 and 400mm.

Recommended for terraces and concrete roofs without thermal insulation.

Post type HL 701

Post made of hot-dip galvanized steel. Height: 500mm; 800mm; 1100mm and 1500mm.

Recommended for terraces and concrete roofs with thermal insulation or temporarily covered with, e.g. snow.

Post type HL 704

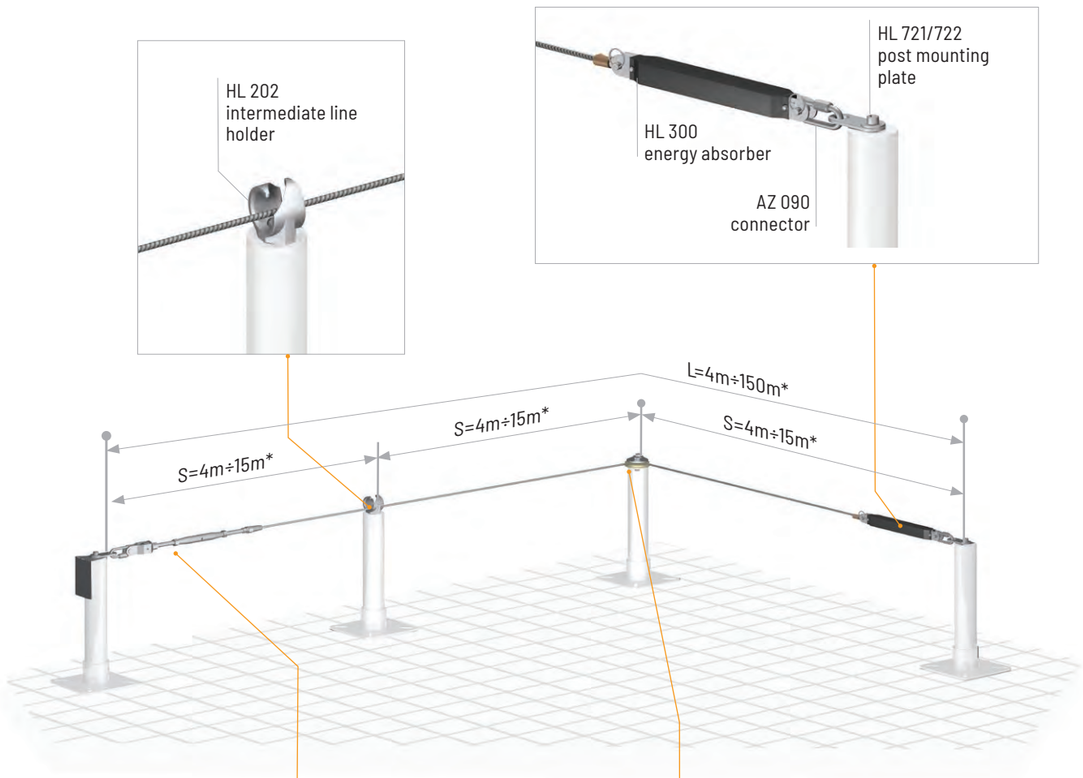

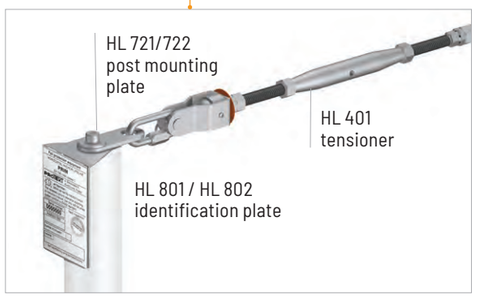

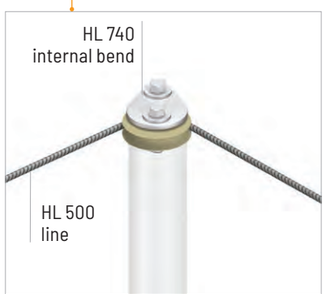

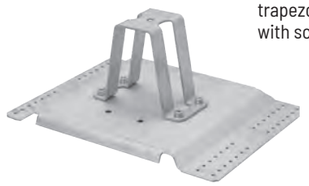

Post of 250mm in height, made of stainless steel. Designed for trapezoidal-sheet roofs, mounted with screws or rivets.

Post type HL 760

Post of 250mm in height, made of stainless steel. Designed for roof covered with standing seam sheet metal roofing.

Post type HL 763

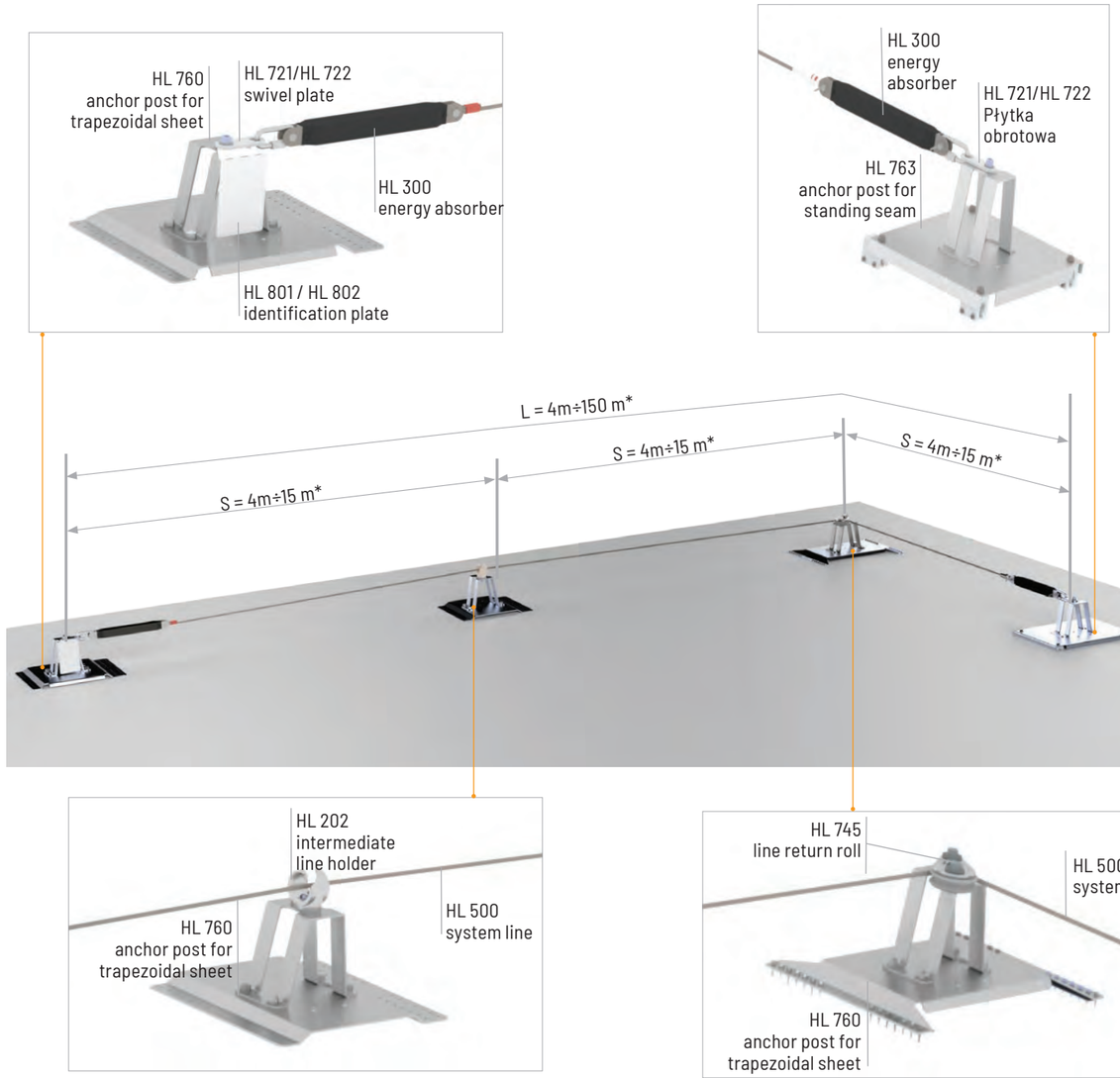

Values of force F transferred on lifeline [kN]*

Total length of system [m]		15	50	100
Span length [m]	5	9,6	8,4	7,4
	15	11,5	10,3	6,8

Values of deflection D of lifeline [m]*

Total length of system [m]		15	50	100
Span length [m]	5	0,6	0,6	9,1
	15	1,2	1,2	1,2

*special solutions may include other length (for more information please contact our representatives). ** given indicative values and cannot be used for system design

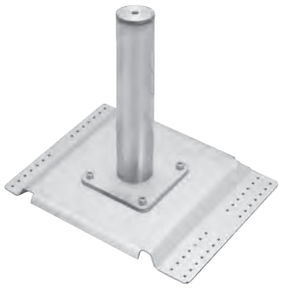

Post type HL 720 of 450mm in height, made of stainless steel. For trapezoidal-sheet roof with therma insulation or temporarily covered with, e.g. snow. Mounted with screws or rivets.

Post type HL 720

Post type HL 720 of 450mm in height, made of stainless steel. For standing seam type roofing, temporarily covered with, e.g. snow.

Post type HL 720-S5Z-400

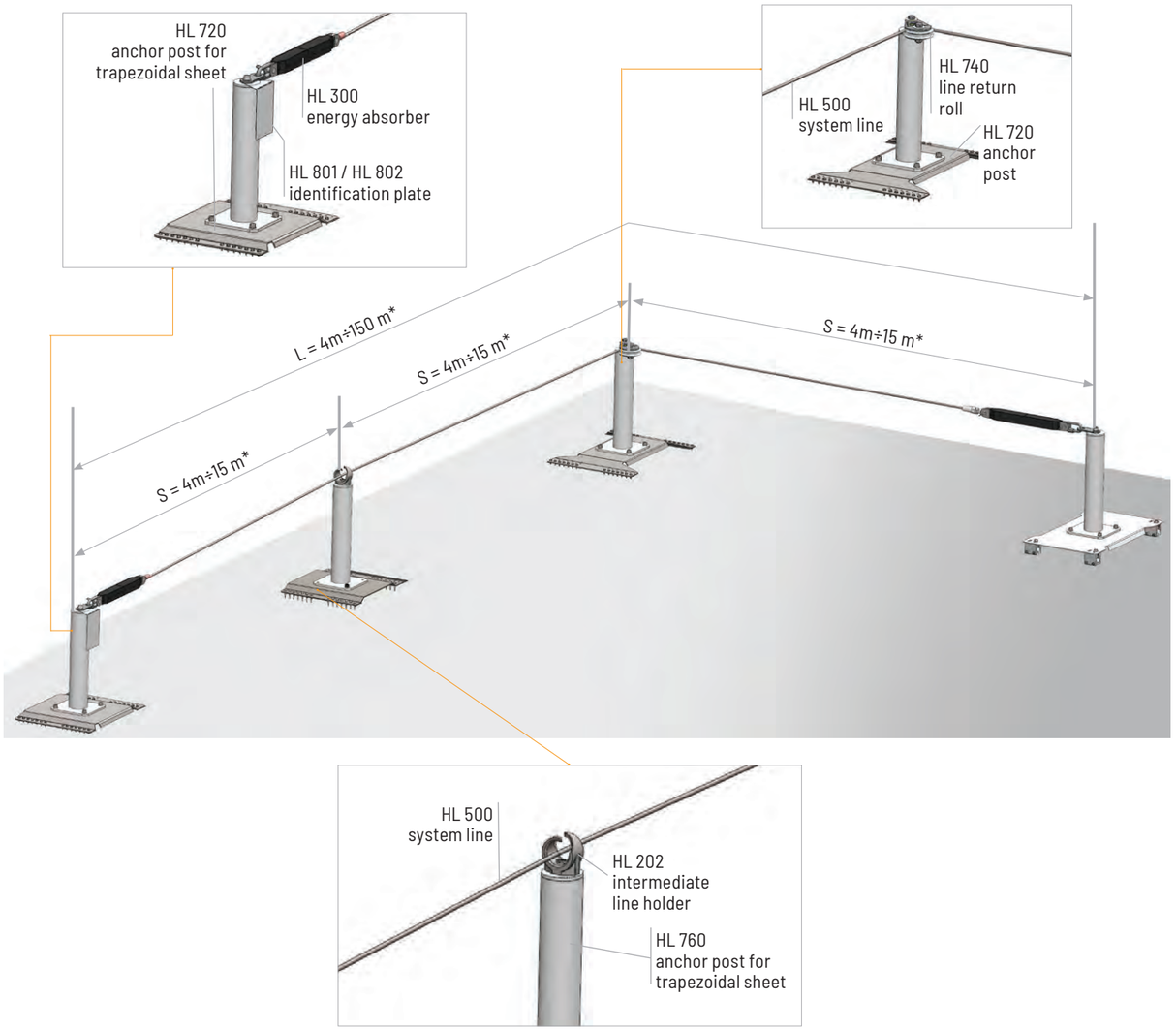

Values of force F transferred on lifeline [kN]**

Total length of system [m]		15	50	100
Span length [m]	5	6,2	6,0	5,7
	15	8,2	7,4	6,8

Values of deflection D of lifeline [m]**

Total length of system [m]		15	50	100
Span length [m]	5	0,8	0,8	0,8
	15	1,6	1,6	1,6

*special solutions may include other length (for more information please contact our representatives). ** given indicative values and cannot be used for system design

® **Example configuration of system PRIM on a flat roof and a platform.**

PRIM system components

Line systems

HL 101
2-point mounting plate

HL 102
3-point mounting plate

HL 130
wall return roll (external bend)

HL 140
wall return roll (internal bend)

HL 201
intermediate line holder

HL 202
intermediate line holder

HL 300
energy absorber

HL 401
tensioner

HL 500
lanyard

HL 501
stainless steel cable ø 8mm

HL 506
cable clip with opening

HL 721/722
2-point swivel plate

HL 740
return roll for pole

HL 745
return roll for pole

AZ 090
connector

HL 801 / HL 802
informative plates
(stainless steel / PVC)

HL 701
pole with
central foot

HL 702
pole with
side foot

HL 704
pole with
central foot
and flange

HL 720 A / HL 720 B
posts for trapezoidal sheet

HL 760 A / HL 760 B
posts for trapezoidal sheet

HL 763
post mounted to standing seam

HL 720-S5Z
post mounted
to standing
seam

® **Example configuration**
of system PRIM on a flat roof covered with roofing paper.

DUO

Horizontal anchorage system with anchor line.

7 MAXIMUM USERS

Line anchor system DUO is a C class anchor device conforming to EN 795. Designed for use by 1, 2 or 3 co-users, with possible re-configuration for 7 users. The system can be installed on building walls, steel structures or roofs or terraces. The system comprises the following types of components:

- end structural anchor elements such as wall plates or posts;
- intermediate structural mounting elements such as line holders or tube bends;
- energy absorbers of line tensioning elements;
- connecting elements for line being a guide for mobile anchor points for personal fall protection equipment.

Each user is attached to an individual slide being a mobile anchor point for personal fall protection equipment and enabling free mobility along the system without hampering the anchorage.

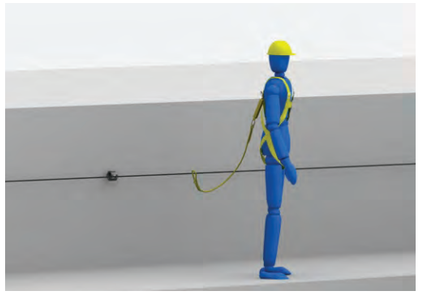

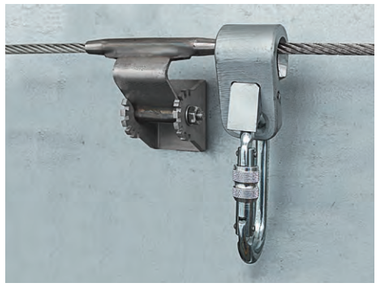

Sequence for travelling the slide, being a mobile anchor point, along the system including pass through a lug without hampering the anchorage.

Stainless-steel mounting plate. For mounting line ends. Can be used on various surface types.

HL 103

Intermediate line holder. Made of stainless steel.

HL 203

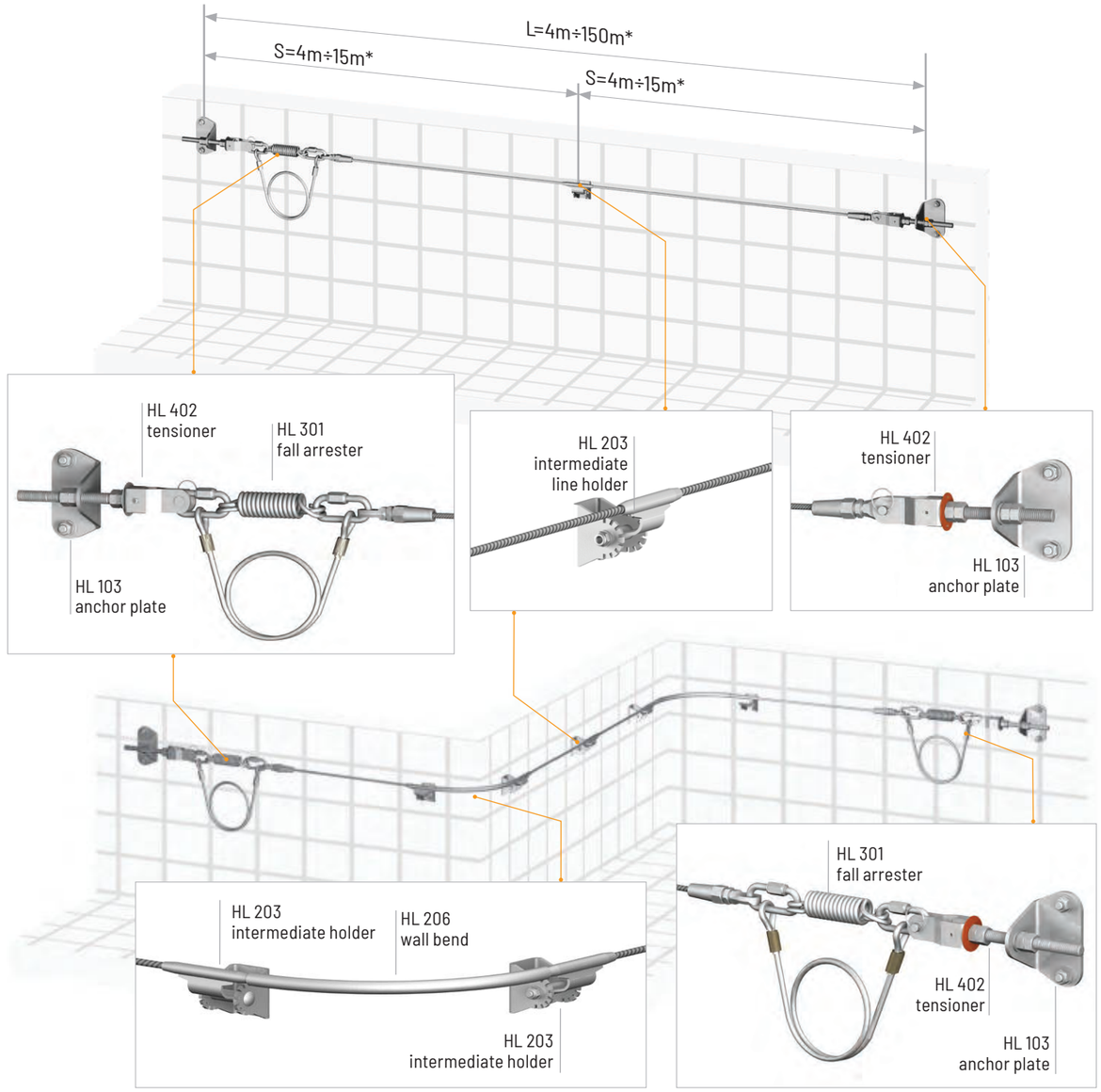

Values of force F transferred on lifeline [kN]**

Total length of system [m]		15	50	100
Span length [m]	5	8,5	8,3	7,4
	15	8,2	8,7	8,5

Values of deflection D of lifeline [m]**

Total length of system [m]		15	50	100
Span length [m]	5	0,7	0,7	0,8
	15	1,6	1,4	1,5

*special solutions may include other length (for more information please contact our representatives). ** given indicative values and cannot be used for system design

Post made of hot-dip galvanized steel. Height: 200mm; 300m and 400mm.

Recommended for terraces and concrete roofs without thermal insulation.

Post type HL 701

Post made of hot-dip galvanized steel. Height: 500mm; 800mm; 1100 mm and 1500 mm.

Recommended for terraces and concrete roofs with thermal insulation or temporarily covered with, e.g. snow.

Post type HL 704

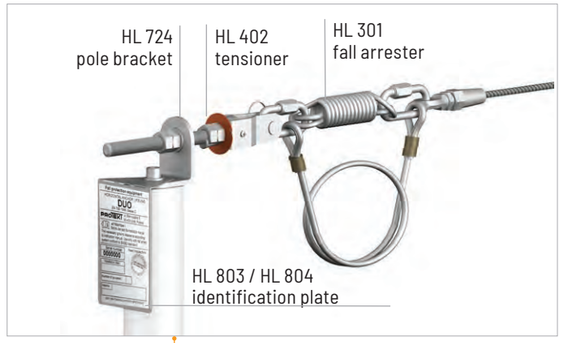

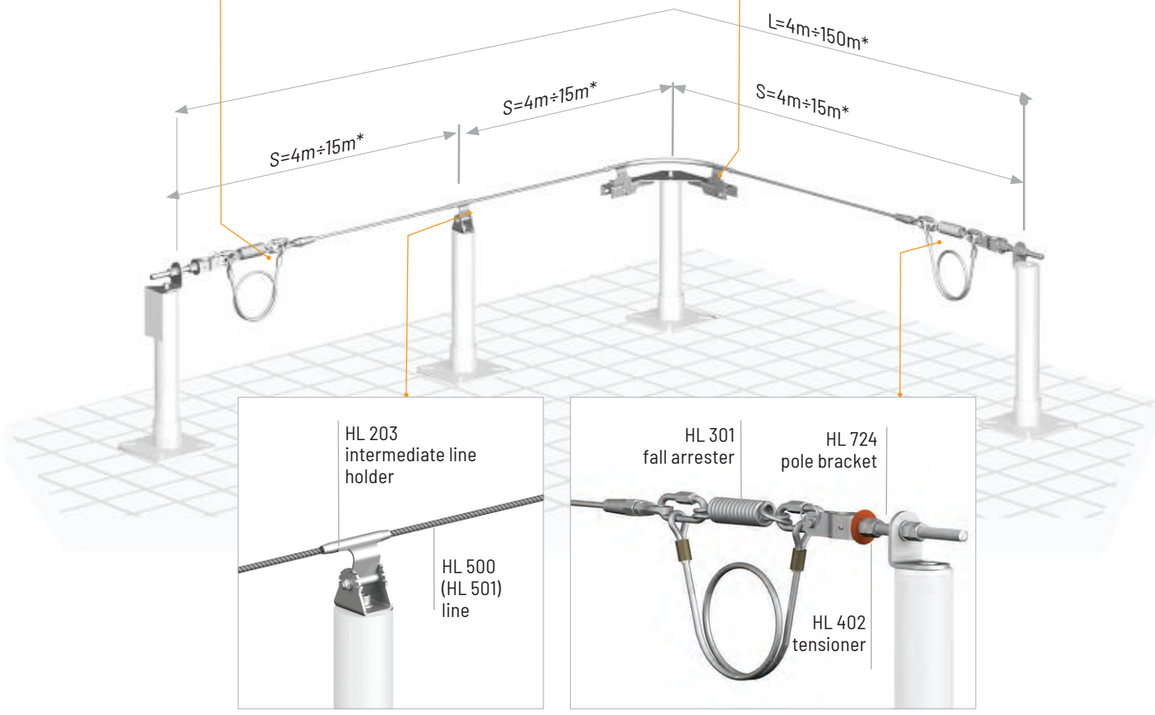

Values of force F transferred on lifeline [kN]*

Total length of system [m]		15	50	100
Span length [m]	5	8,3	8,2	7,2
	15	7,8	8,5	8,3

Values of deflection D of lifeline [m]*

Total length of system [m]		15	50	100
Span length [m]	5	0,6	0,7	0,8
	15	1,4	1,5	1,5

*special solutions may include other length (for more information please contact our representatives). ** given indicative values and cannot be used for system design

250mm in height, made of stainless steel. Designed for trapezoidal -sheet roofs, mounted with screws or rivets.

Post type HL 760

250mm in height, made of tainless steel. Designed for roof covered with standing seam sheet metal roofing.

Post type HL 763

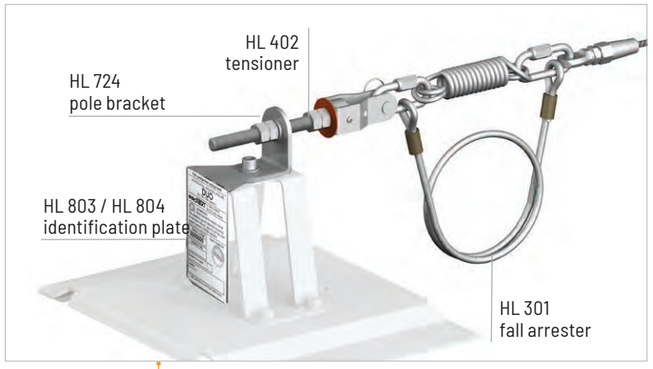

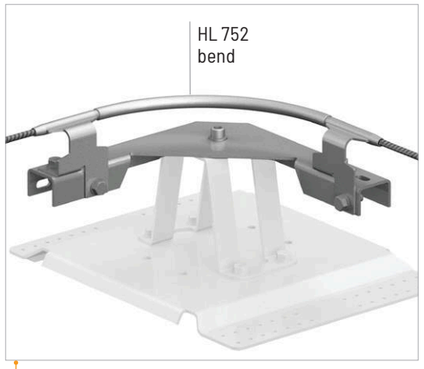

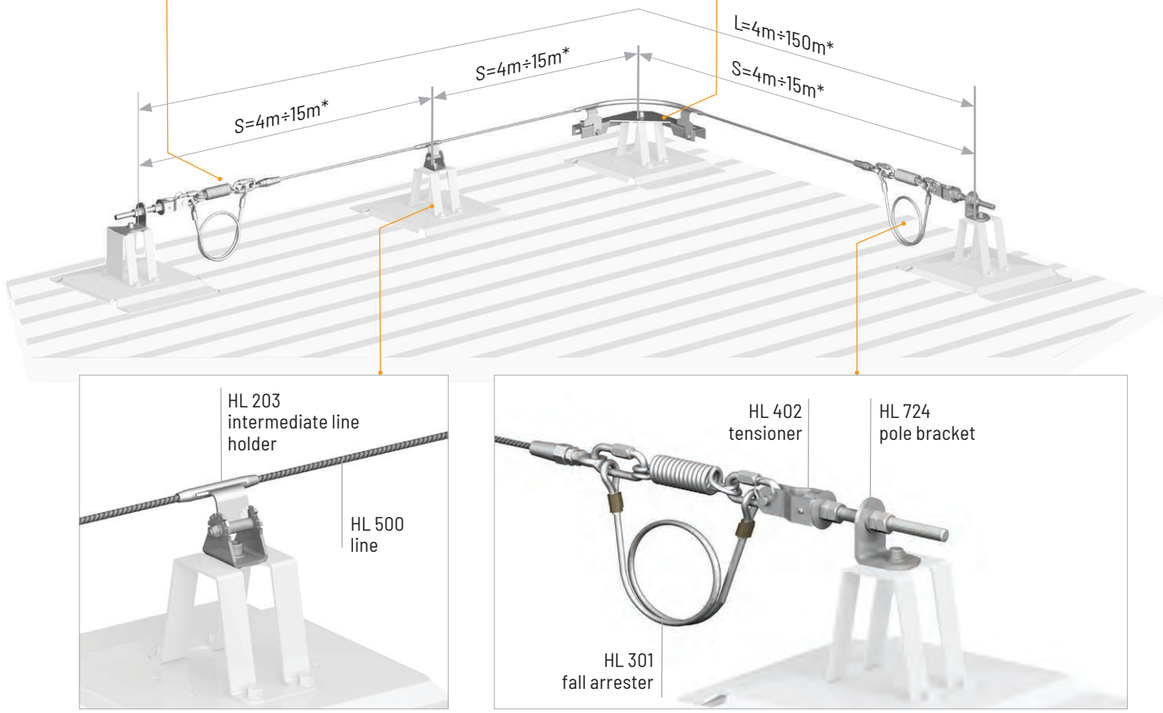

Values of force F transferred on lifeline [kN]*

Total length of system [m]		15	50	100
Span length [m]	5	8,3	8,2	7,2
	15	7,8	8,5	8,3

Values of deflection D of lifeline [m]*

Total length of system [m]		15	50	100
Span length [m]	5	0,7	0,7	0,8
	15	1,5	1,4	1,5

*special solutions may include other length (for more information please contact our representatives). ** given indicative values and cannot be used for system design

Post type HL 720 of 450mm in height, made of stainless steel. For trapezoidal-sheet roof with thermal insulation or temporarily covered with, e.g. snow. Mounted with screws or rivets.

Post type HL 720-C

Post type HL 720 of 450mm in height, made of stainless steel. For standing seam type roofing, temporarily covered with, e.g. snow.

Post type
HL 720-S5Z-400

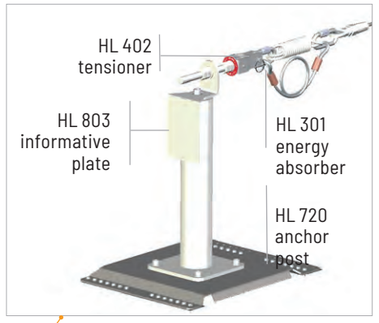

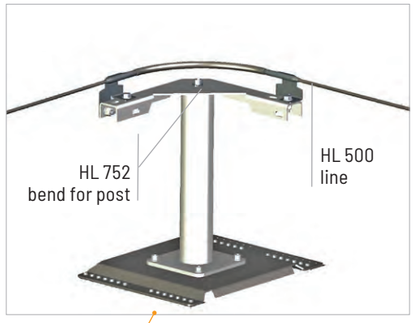

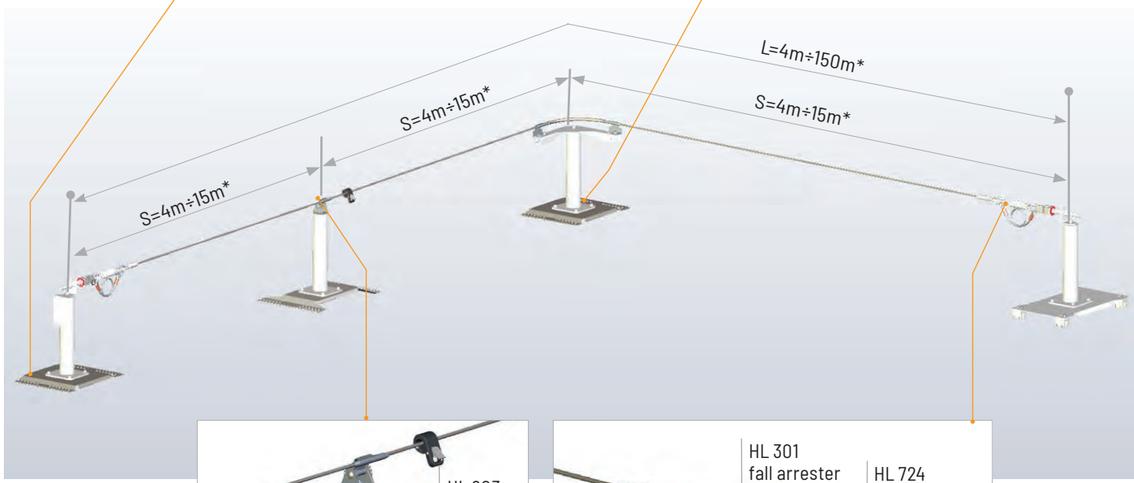

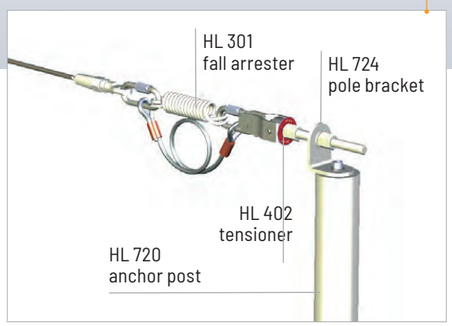

Values of force F transferred on lifeline [kN]*

Total length of system [m]		15	50	100
Span length [m]	5	5,9	5,7	5,5
	15	7,6	7,6	7,6

Values of deflection D of lifeline [m]*

Total length of system [m]		15	50	100
Span length [m]	5	0,9	0,95	1,02
	15	1,8	1,8	1,9

*special solutions may include other length (for more information please contact our representatives). ** given indicative values and cannot be used for system design

Mounting end and intermediate points

Line systems

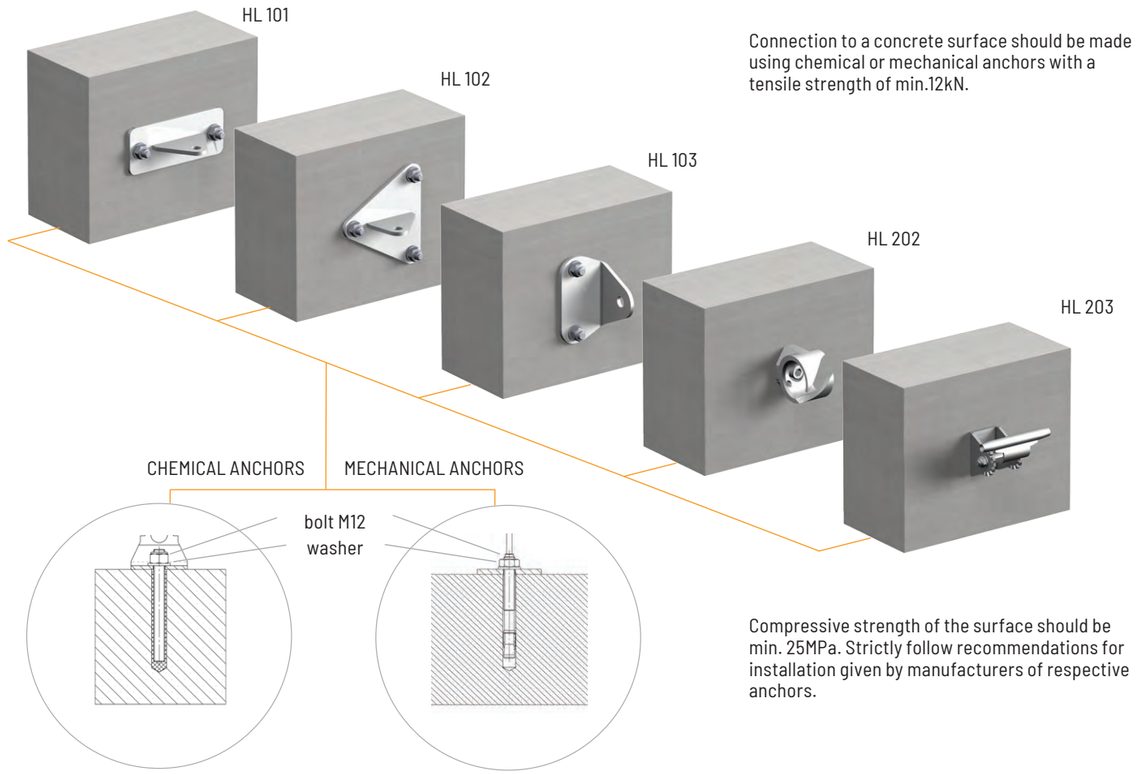

Connection to a concrete surface should be made using chemical or mechanical anchors with a tensile strength of min.12kN.

Compressive strength of the surface should be min. 25MPa. Strictly follow recommendations for installation given by manufacturers of respective anchors.

Mounting end and intermediate points to steel profiles

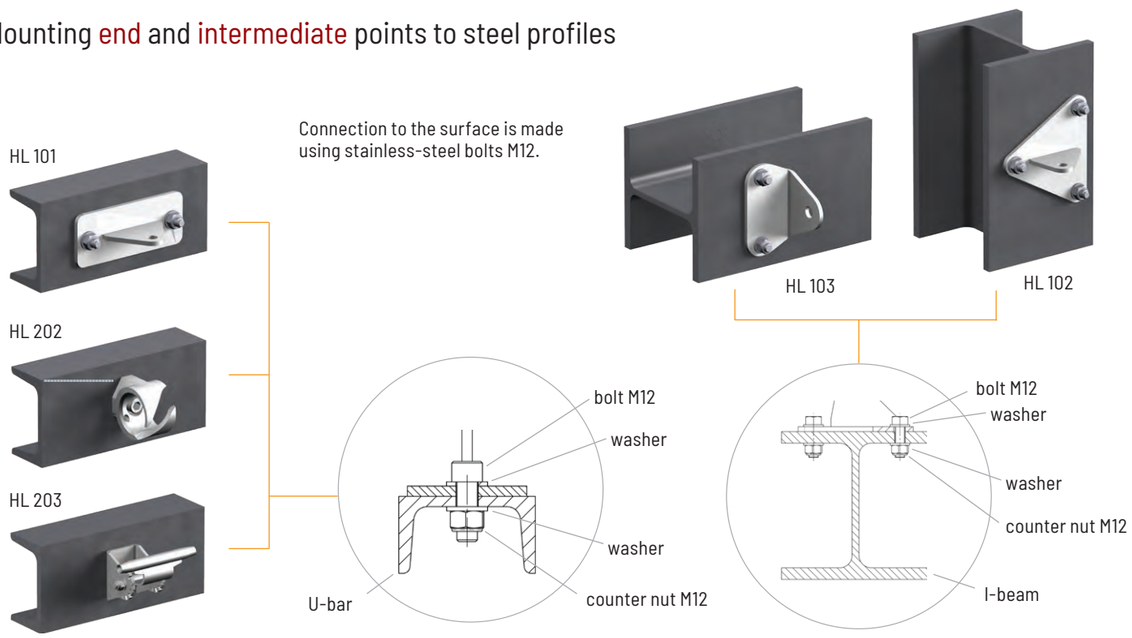

Connection to the surface is made using stainless-steel bolts M12.

Mounting post HL 704

Line systems

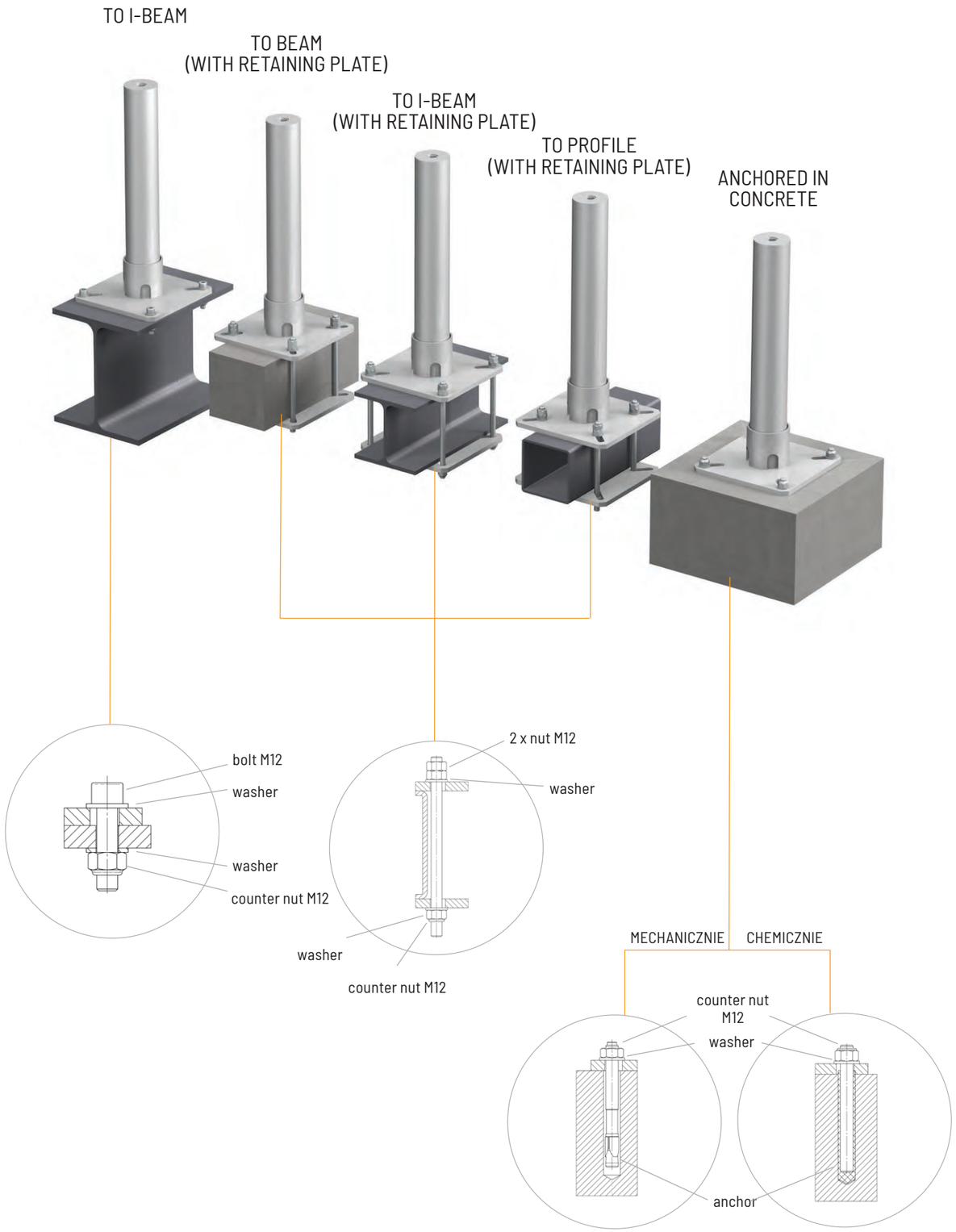

Mounting posts HL 720, HL 760 to standing seam and trapezoidal sheets

Line systems

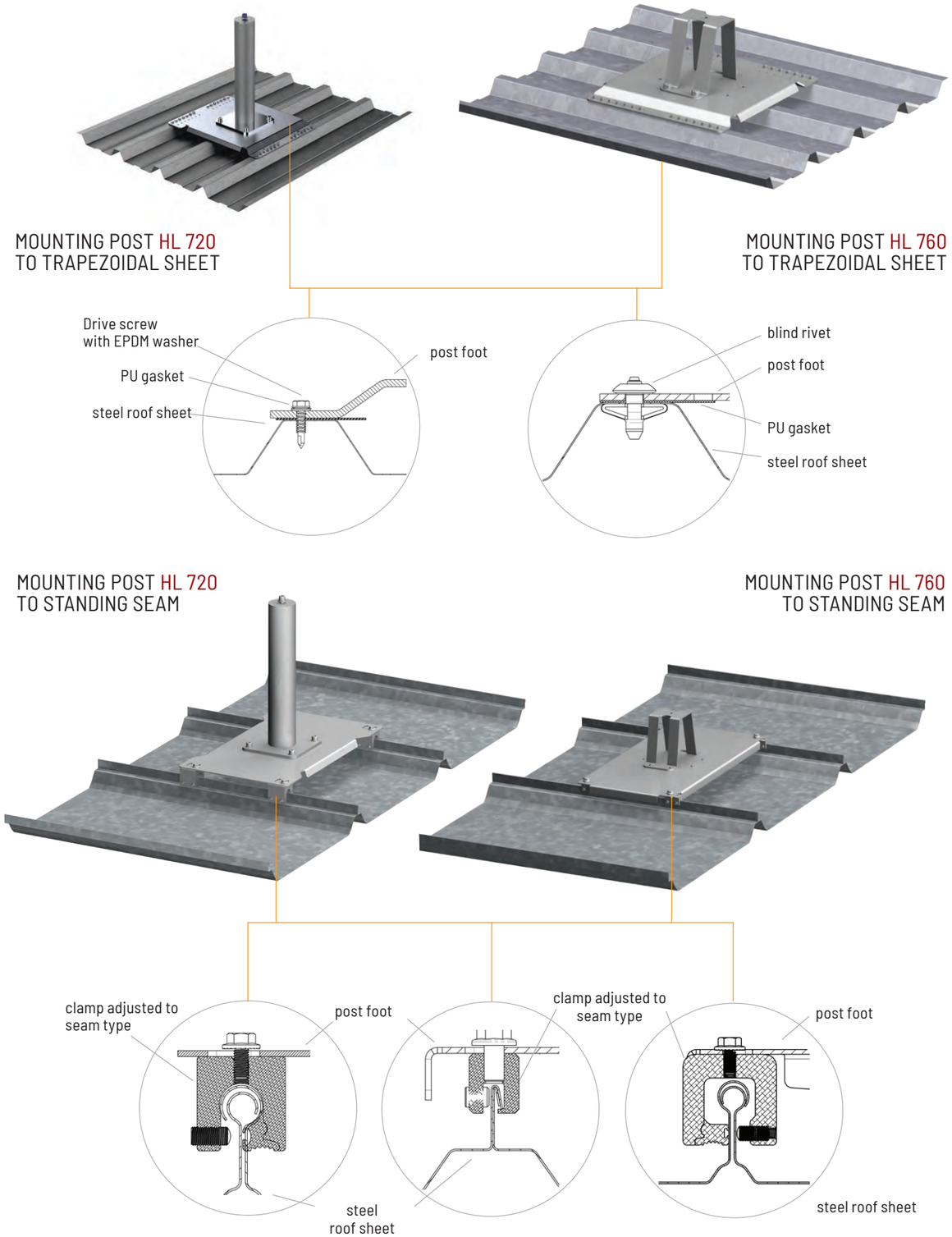

DUO system components

Line systems

HL 103
2-point mounting plate

HL 203
intermediate line holder

HL 206
bend guiding tube

HL 301
fall arrester

HL 402
tensioner

HL 603
slide (mobile anchor point)

HL 724
pole bracket

HL 752
bend for pole

HL 500
lanyard

HL 501
stainless steel cable ø 8mm

HL 506
cable clip with opening

HL 804 / HL 803
informative plates (stainless steel / PVC)

HL 701
pole with central foot

HL 702
pole with side foot

HL 704
pole with central foot and flange

AZ 090
connector

HL 720 A / HL 720 B
posts for trapezoidal sheet

HL 760 A / HL 760 B
posts for trapezoidal sheet

HL 763
post mounted to standing seam

HL 720-S5Z
post mounted to standing seam

® **Example configuration of DUO system.**

PROLINER

Horizontal anchorage system
with double anchor line.

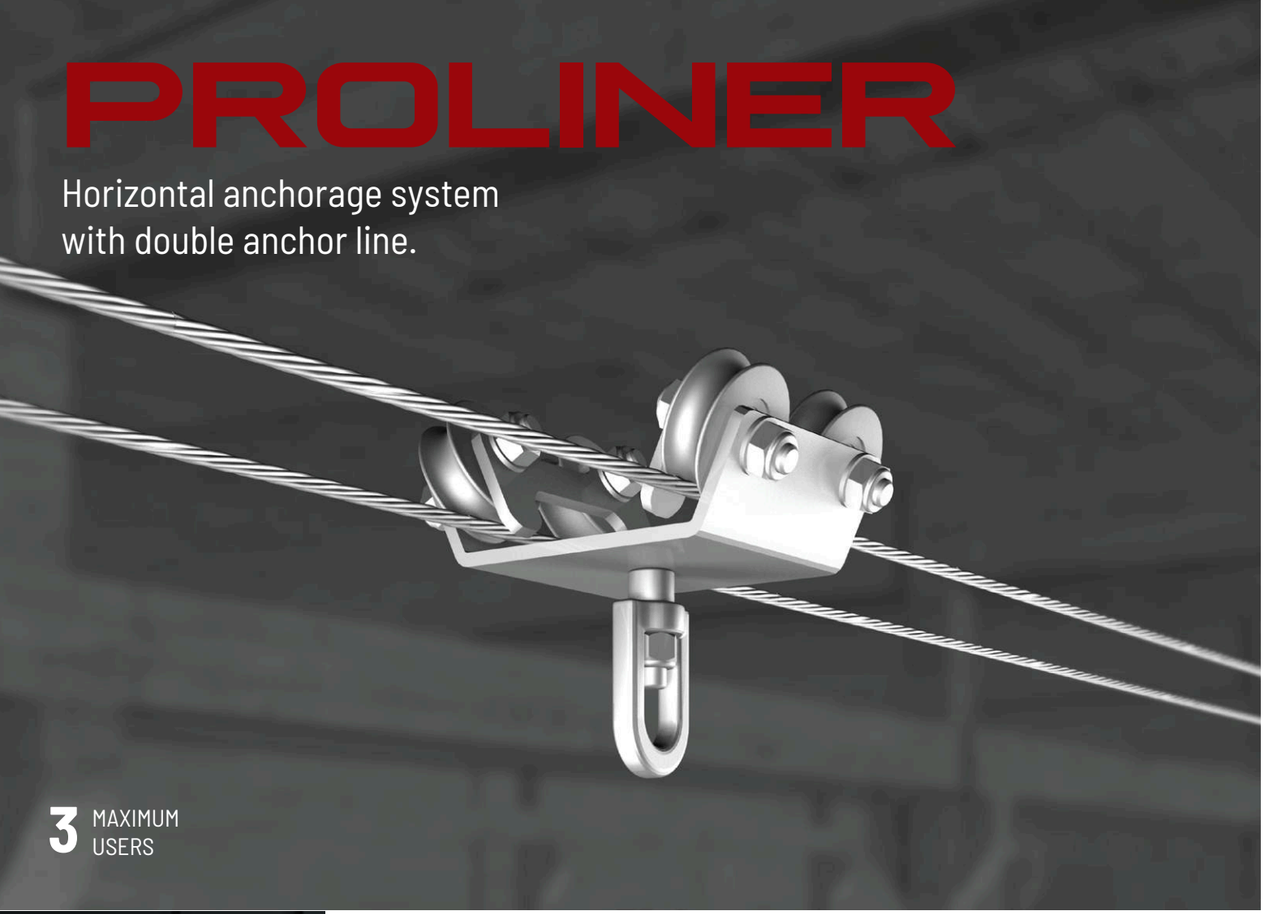

3 MAXIMUM USERS

Horizontal line anchor system PROLINER is a C class anchor device conforming to EN 795 and CEN /TS 16415. The system is intended for use by maximum 3 users at the same time. All the PROLINER system components are made of stainless steel. The trolley is the system's mobile anchor point for personal fall protection equipment. It enables mobility along the system while providing fall protection in the vertical. The anchor line being trolley's runway is made of double stainless steel cable of 8mm in diameter. Fall arrester is used to reduce forces affecting support structures, and return roll to properly tension the cable used within the system. Systems with lengths greater than 12m are equipped with intermediate supports enabling the trolley's run. The data plate includes basic information on use of the system and individual serial number, date of installation (month and year) and date of next inspection. The system is suitable for works in explosion-hazard zones.

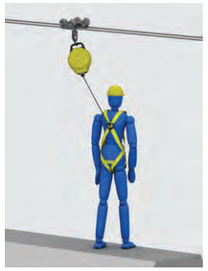

Installation to ceiling / structure

Line systems

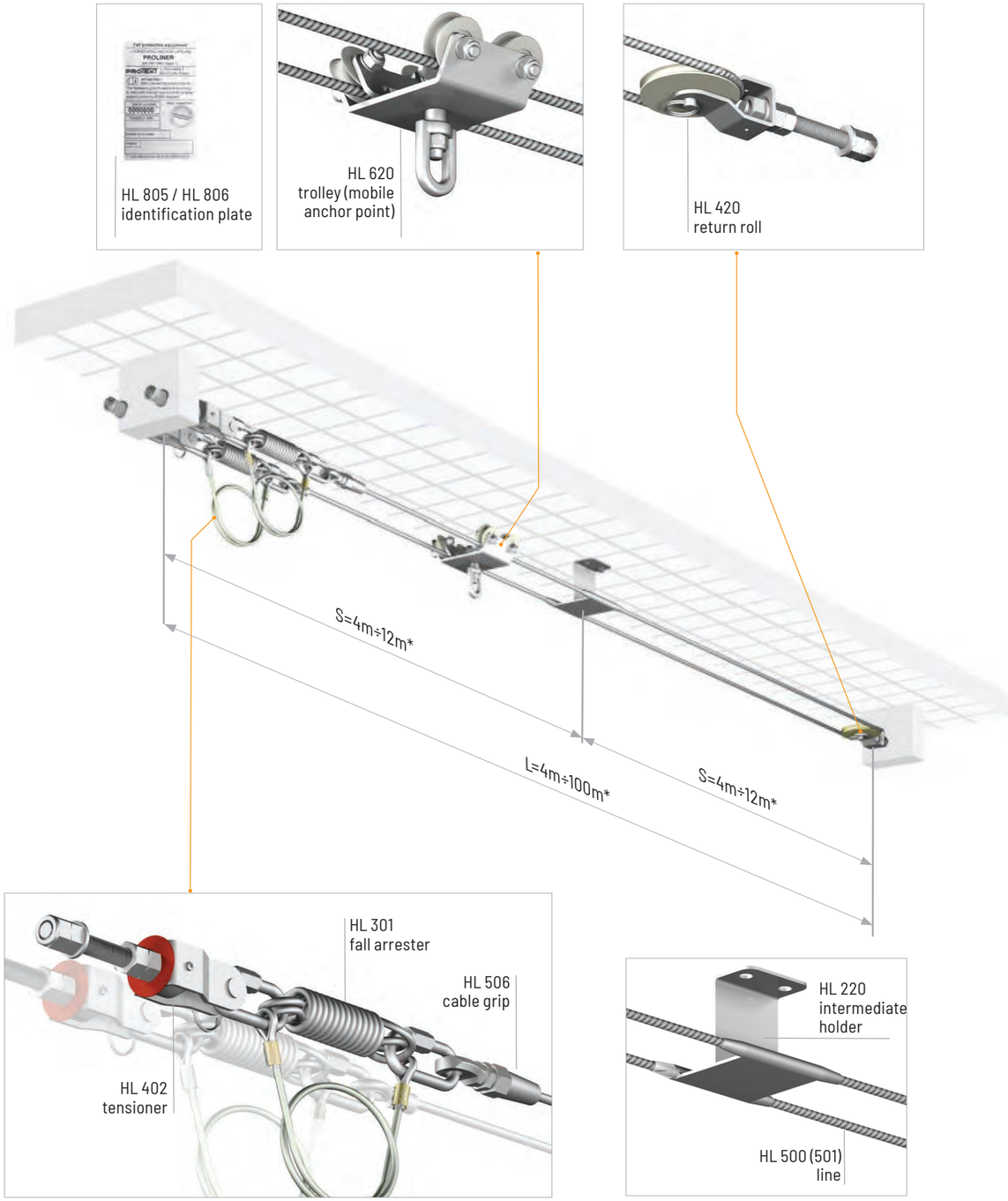

* special solutions may include other length (for more information please contact PROTEKT representatives)

Line systems

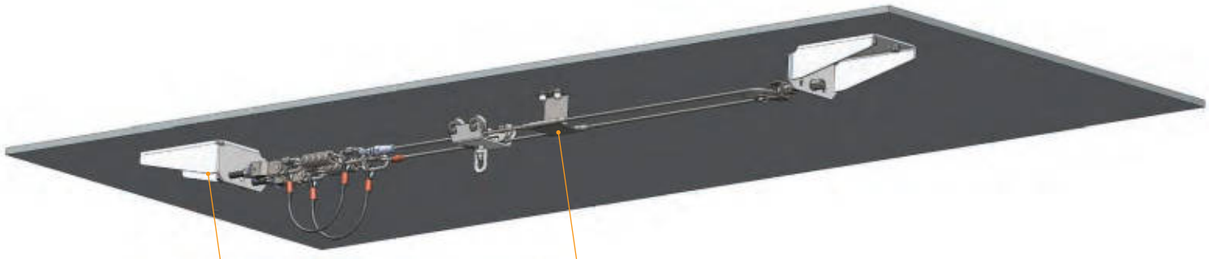

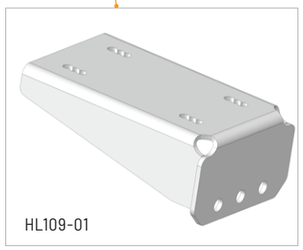

Stainless-steel mounting plate.
Mounted with bolts or anchors on a horizontal surface.

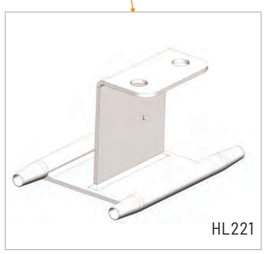

Intermediate line holder, made of stainless steel. Mounted with bolts or anchors on a horizontal surface.

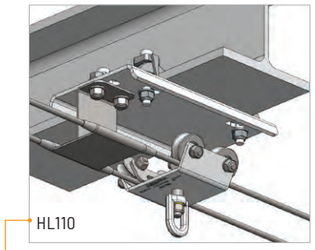

Set for installation of the system guided transversally to the beam. Mounting with lugs to I-beams. Materials: stainless steel and galvanized steel

HL 110- yy (where yy = S, M, L, 1VL, 2VL ...)

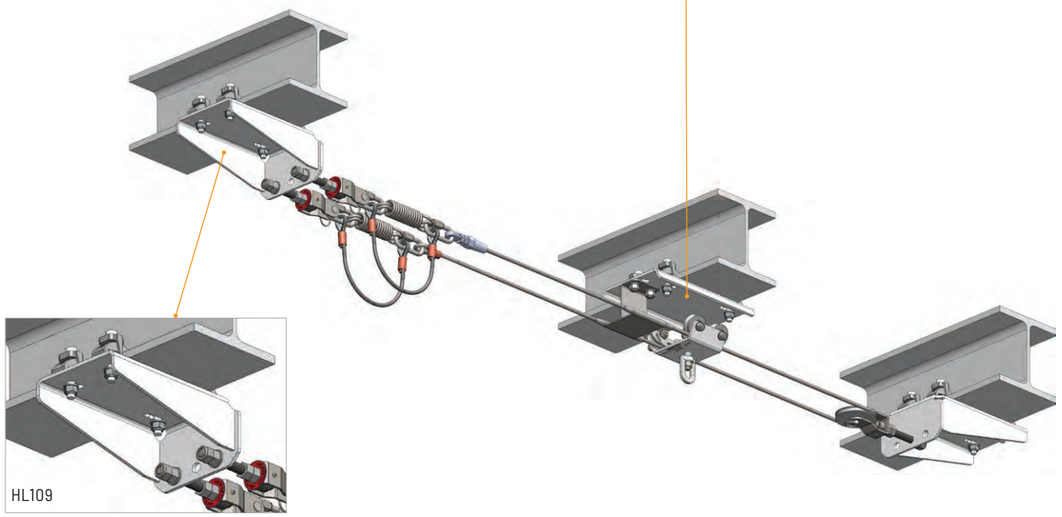

Set for installation of end points of the system guided transversally to the beam. Mounting with lugs to I-beams. Materials: stainless steel and galvanized steel

HL 109 - yy (where yy = S, M, L, 1VL, 2VL ...)

Line systems

HL 110-xx + HL 111-xx + 4xHL 910 (where xx = 01, 02, 03, 04, 05)

Set for installation of intermediate points of the system guided transversally to the beam. Mounting to closed sections, I-beams or U-bars.
Material: stainless steel.

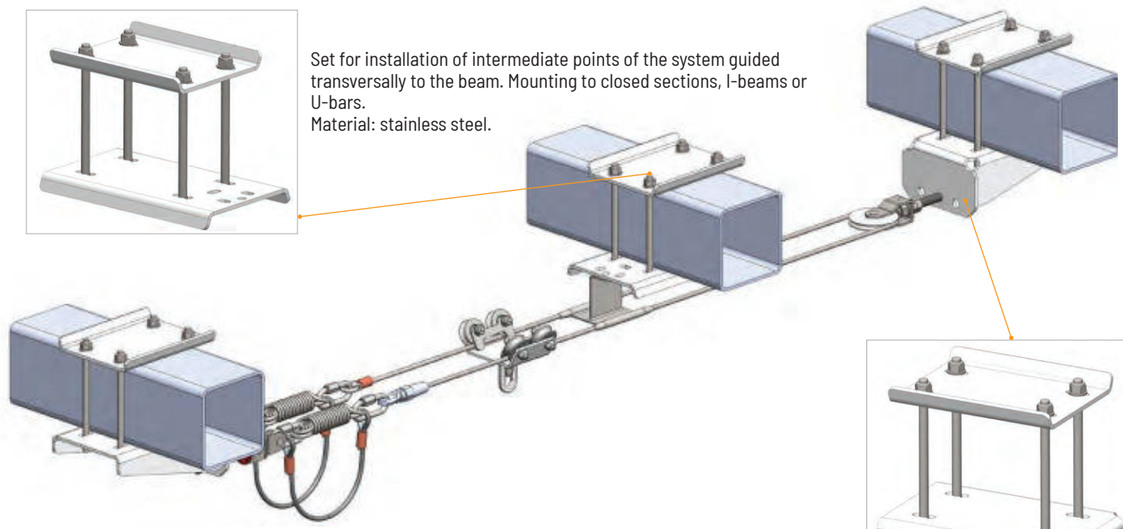

Set for installation of end points of the system guided transversally to the beam. Mounting to closed sections, I-beams, U-bars, etc.
Material: stainless steel.

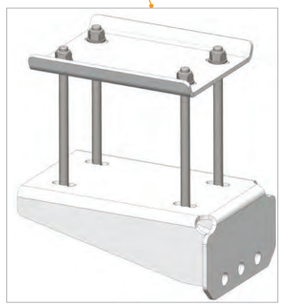

HL109-xx + HL111-xx + 4xHL910
(where xx = 01, 02, 03, 04, 05)

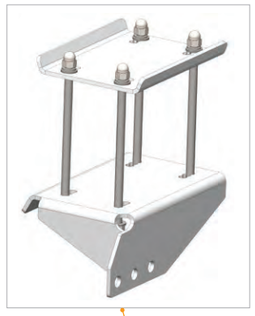

HL 115-xx + HL 111-xx + 4xHL 910 (where xx = 01, 02, 03, 04, 05)

Set for installation of end points of the system guided along the beam. Mounting to closed or open sections with various cross section shapes. Materials: stainless steel.

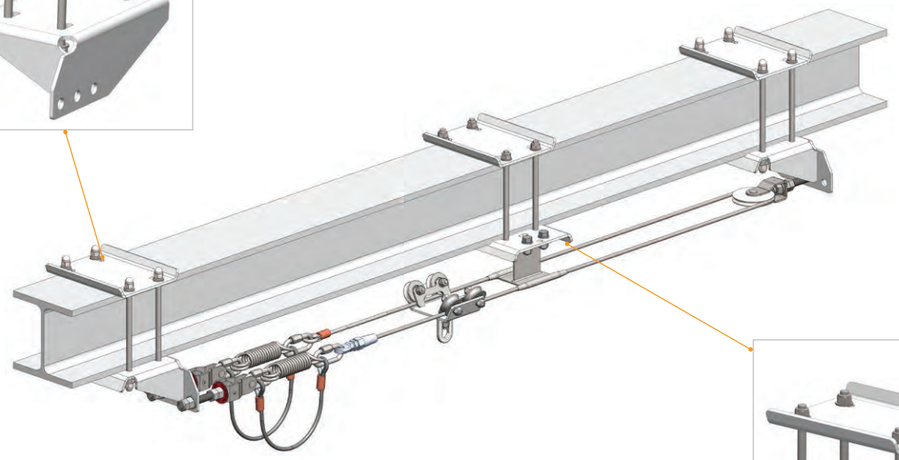

HL 110-xx + HL 111-xx + 4xHL 910
(where xx = 01, 02, 03, 04, 05)

Set for installation of intermediate points of the system guided along the beam. Mounting to closed or open sections with various cross section shapes.
Materials: stainless steel.

PROLINER system components on page 64.

MONOLINE

Horizontal anchorage system with trolley and single anchor line.

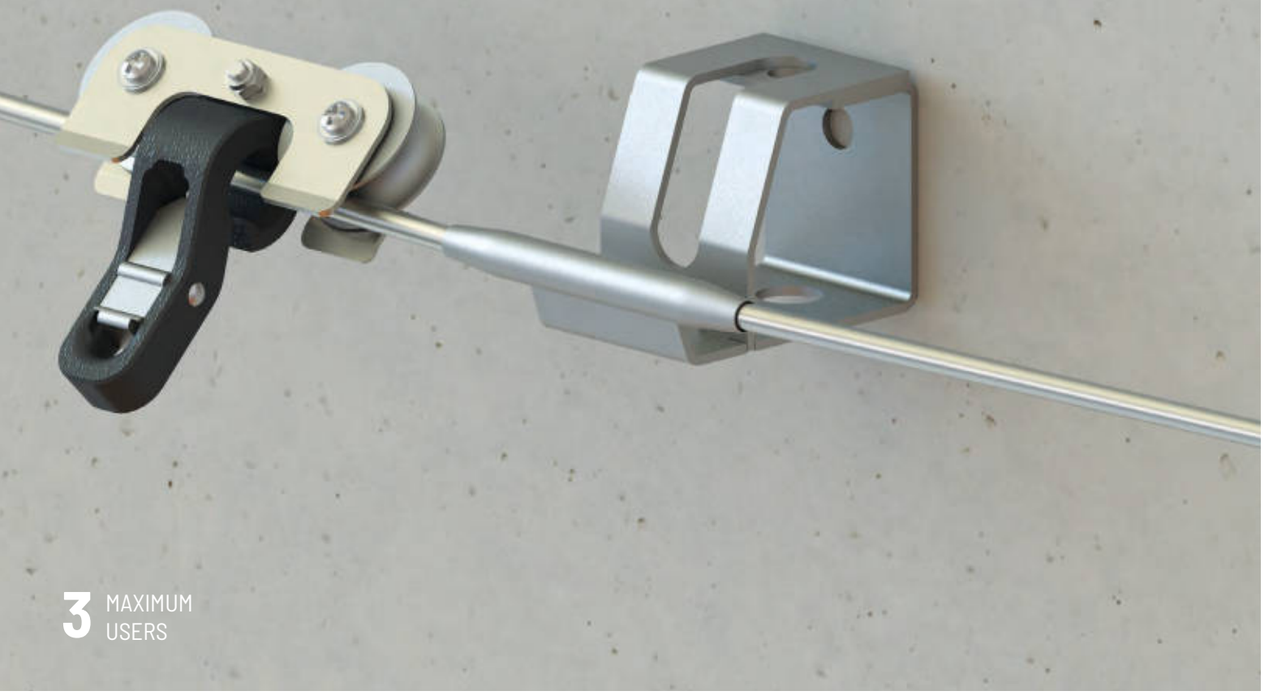

3 MAXIMUM USERS

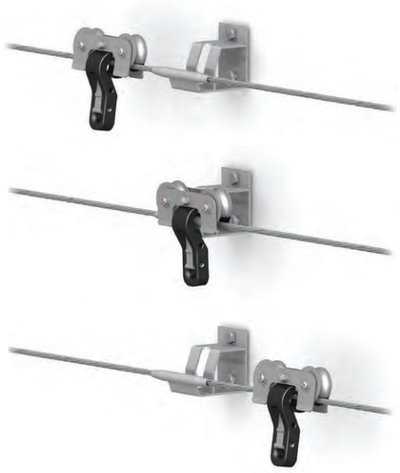

The MONOLINE system concept is based on a use of a trolley being a mobile anchor point for personal fall arrest system which cooperates with a single steel anchor line. Such solution provides user with a high comfort of horizontal mobility because the trolley travels easily along the anchor line, which is comparable to rail systems. While it is possible to keep low investment costs, characteristic for line systems.

General features of system MONOLINE:

- Modular design and small number of components
- Quick installation in various configurations
- Can be used by 3 users at the same time

The system MONOLINE conforms to EN 795:2012 and CEN/TS 16415:2013. It is a C class anchor device intended for use with personal fall protection equipment.

Installation to ceiling / floor / wall / structure

Line systems

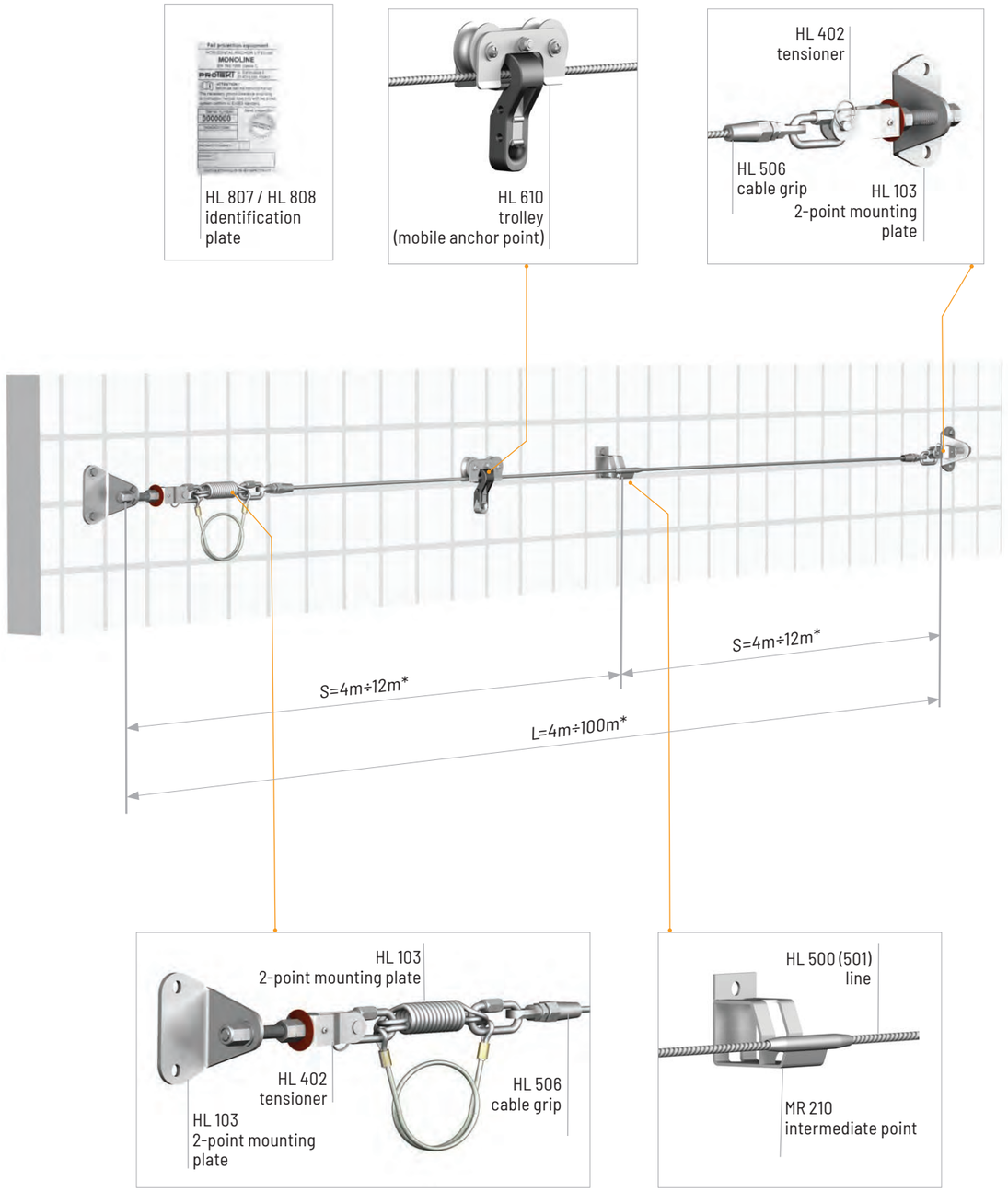

* special solutions may include other length (for more information please contact our representatives)

Stainless-steel mounting plate.
Can be used on various surface types.

Stainless-steel mounting plate. Designed for mounting on steel or high-strength concrete elements.

Set for installation of end of the system guided transversally to the beam. Mounting with lugs to I-beams.

Materials: stainless steel and galvanized steel

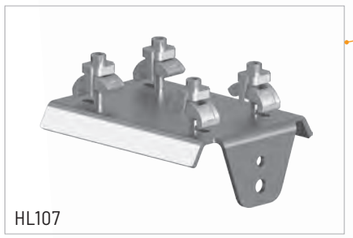

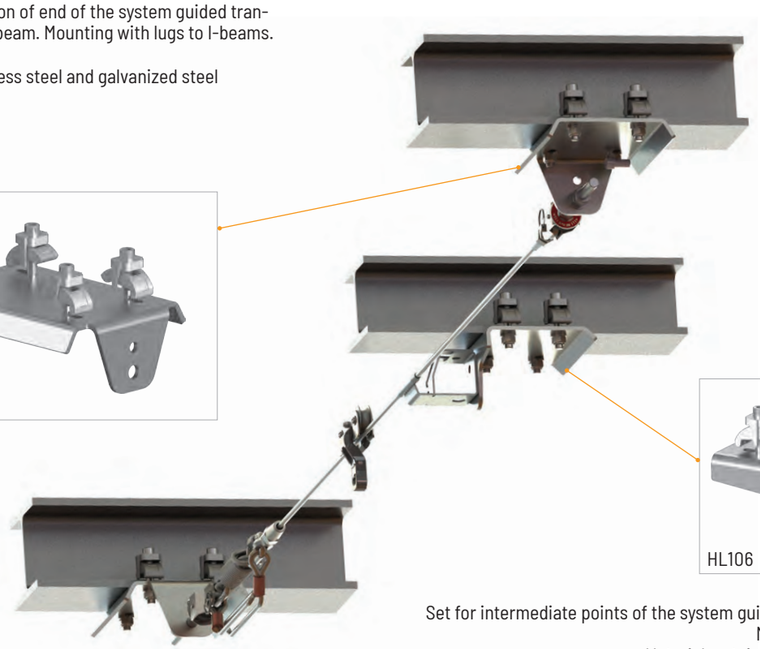

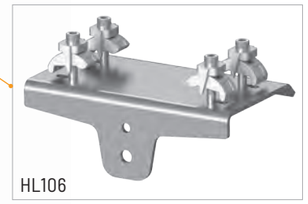

Set for intermediate points of the system guided transversally to the beam.
Mounting with lugs to I-beams.
Materials: stainless steel and galvanized steel
HL 106 - yy (where yy = S, M, L, 1VL, 2VL ...)

Set for end points of the system guided transversally to the beam.
Mounting to closed or open sections.

Materials: stainless steel and galvanized steel

HL 107 - xx + HL 111 - xx + 4 x HL 910
(where xx = 01, 02, 03, 04, 05)

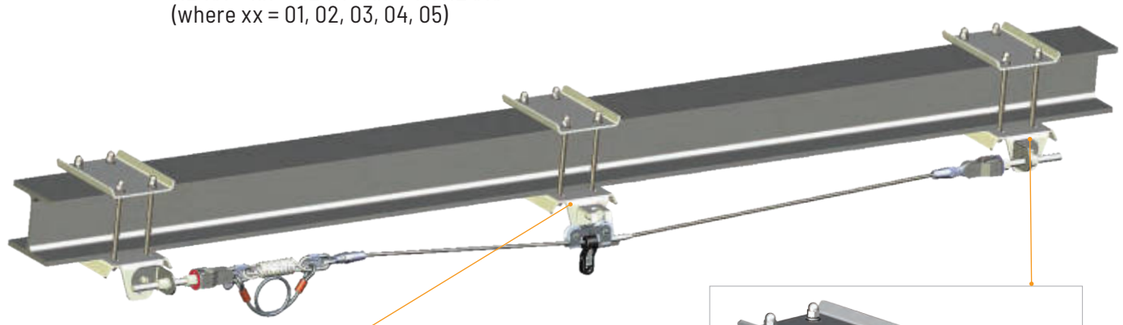

Set for intermediate points of the system guided along the beam. Mounting to closed or open sections with various cross section shapes.

Materials: stainless steel and galvanized steel

HL107 - xx + HL111 - xx + 4 x HL910
(where xx = 01, 02, 03, 04, 05)

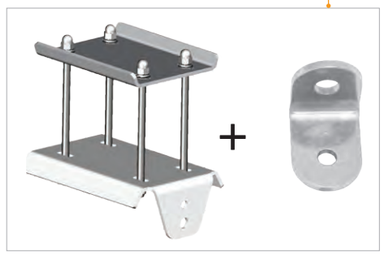

HL 107 - xx + HL 111 - xx + 4 x HL 910 + HL 724
(where xx = 01, 02, 03, 04, 05)

Set for end points of the system guided along the beam.
Mounting to closed or open sections with various cross section shapes.

Materials: stainless steel.

MONOLINE system components on page 67

PROLINER system components

Line systems

HL 221
intermediate line holder with lug

HL 301
fall arrester

HL 420
return roll

HL 620
trolley

HL 500
lanyard

HL 506
cable clip with opening

AZ 090
connector

HL 806 / HL 805
informative plates
(stainless steel / PVC)

MONOLINE system components

Line systems

HL 103
2-point mounting plate

HL 106
mounting A

HL 107
mounting B

HL 210
intermediate point

HL 301
fall arrester

HL 402
tensioner

HL 610
trolley

HL 724
mounting plate

HL 500
lanyard

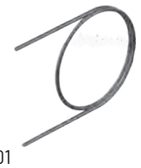
HL 501
stainless steel cable ø 8mm

HL 506
cable clip with opening

HL 807 / HL 808
identification plate

HL 107 - xx + HL 111 - xx +
4 x HL 910
mounting kit
(where xx = 01, 02, 03, 04, 05)

TRASER

Horizontal anchorage system
with rail guide.

3 MAXIMUM USERS

Rail anchorage system TRASER is a D class anchor device conforming to EN 795:2012 and CEN /TS 16415. Designed for connection of personal fall protection equipment. The system enables horizontal mobility and provides protection for up to 3 users at the same time. The system comprises a horizontal rail as a truss, trolley being a mobile anchor point for personal fall protection equipment, runway end locks, rail guide connectors and elements for mounting the guides on a fixed structure. The rail guide is made of hot-dip galvanized steel. Trolley, connectors, runway locks and elements for mounting the guides on a fixed structure are made of hot-dip galvanized, galvanized and stainless steel or plastic. The system is suitable for works in explosion-hazard zones.

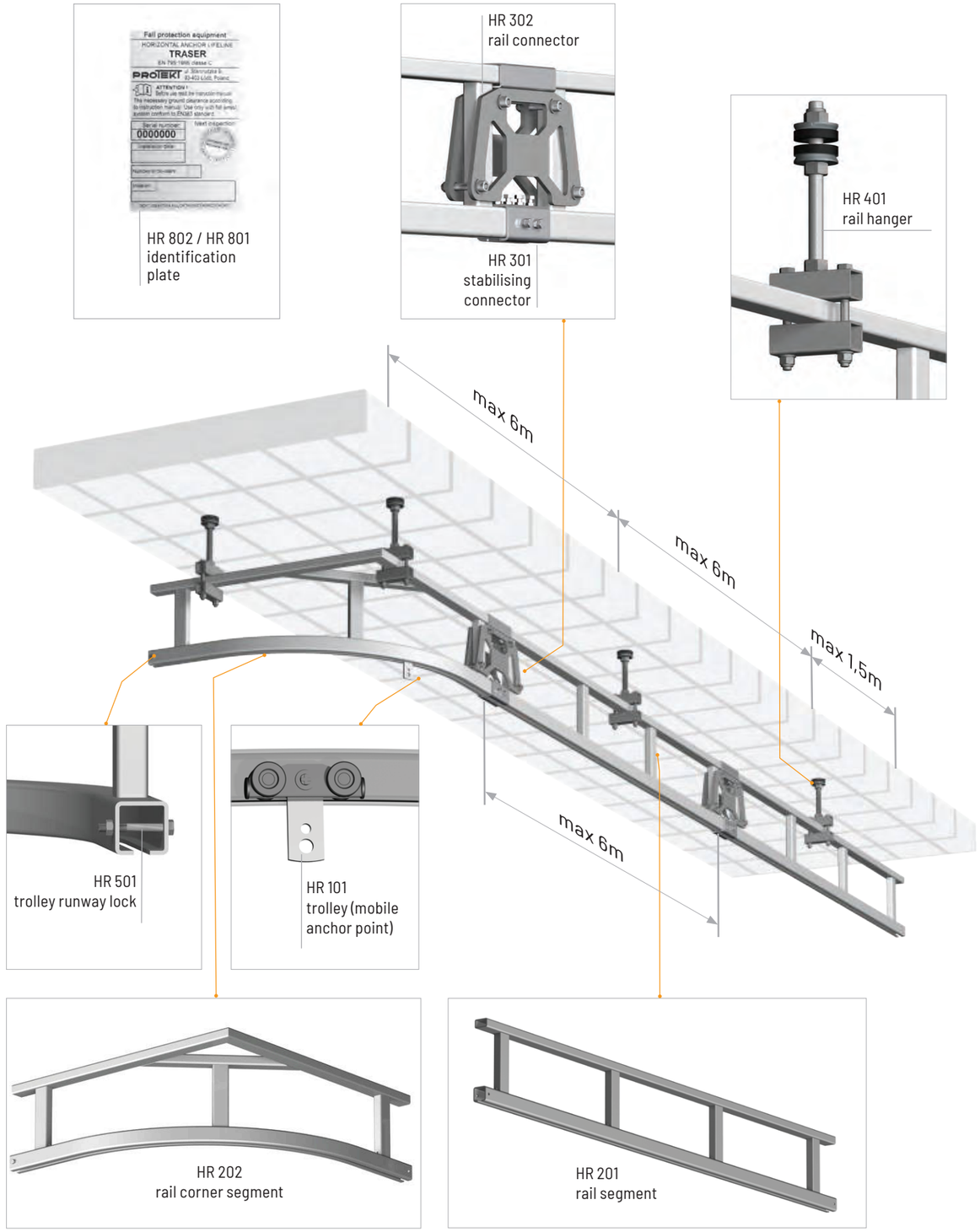

TRASER system components

Rail systems

HR 101
trolley

HR 201-Le
rail segment (Le - length [cm])

HR 202
90º bend segment

HR 301
rail connector

HR 302
rail connector type X

HR 401
hanger

HR 501
lock

HR 802 / HR 801
identification plate

® Example configuration
of TRASER system on a ramp.

MARAN

Horizontal anchorage system with rail guide.

2 MAXIMUM USERS

The system is used for attaching personal fall protection system on a fixed structure and at the same time enables mobility while keeping full protection. The system can be used by 2 users at the same time, each of whom should be attached to a separate trolley. The rail anchorage system comprises a rail being the trolley runway (mobile anchor point for personal fall protection equipment), runway end locks, rail guide connectors, bends and elements for mounting the guide on a fixed structure. The rail guide is made of aluminium alloy. Trolley, rail connectors, runway locks, elements for mounting the guide on a fixed structure are made of aluminium alloy, and connecting elements (bolts) are made of stainless steel. The system MARAN is a D class anchor device conforming to EN 795:2012 and CEN / TS 16415. The system is suitable for works in explosion-hazard zones.

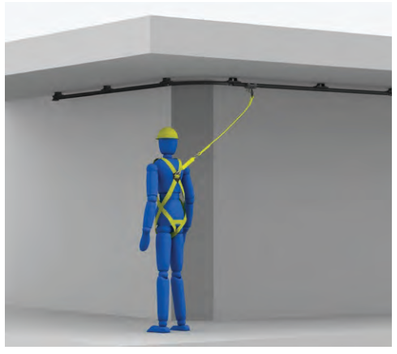

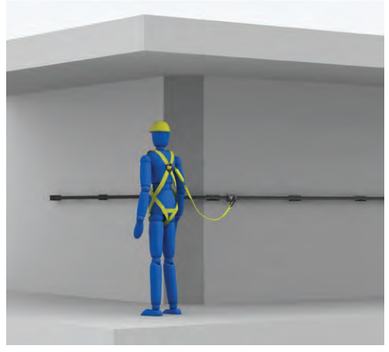

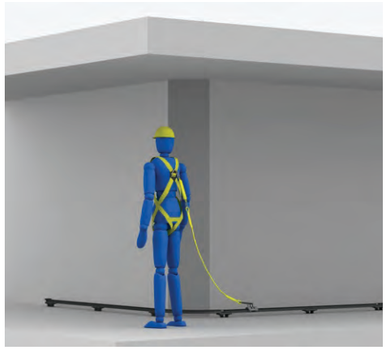

Installation to ceiling / floor / wall / structure

Rail systems

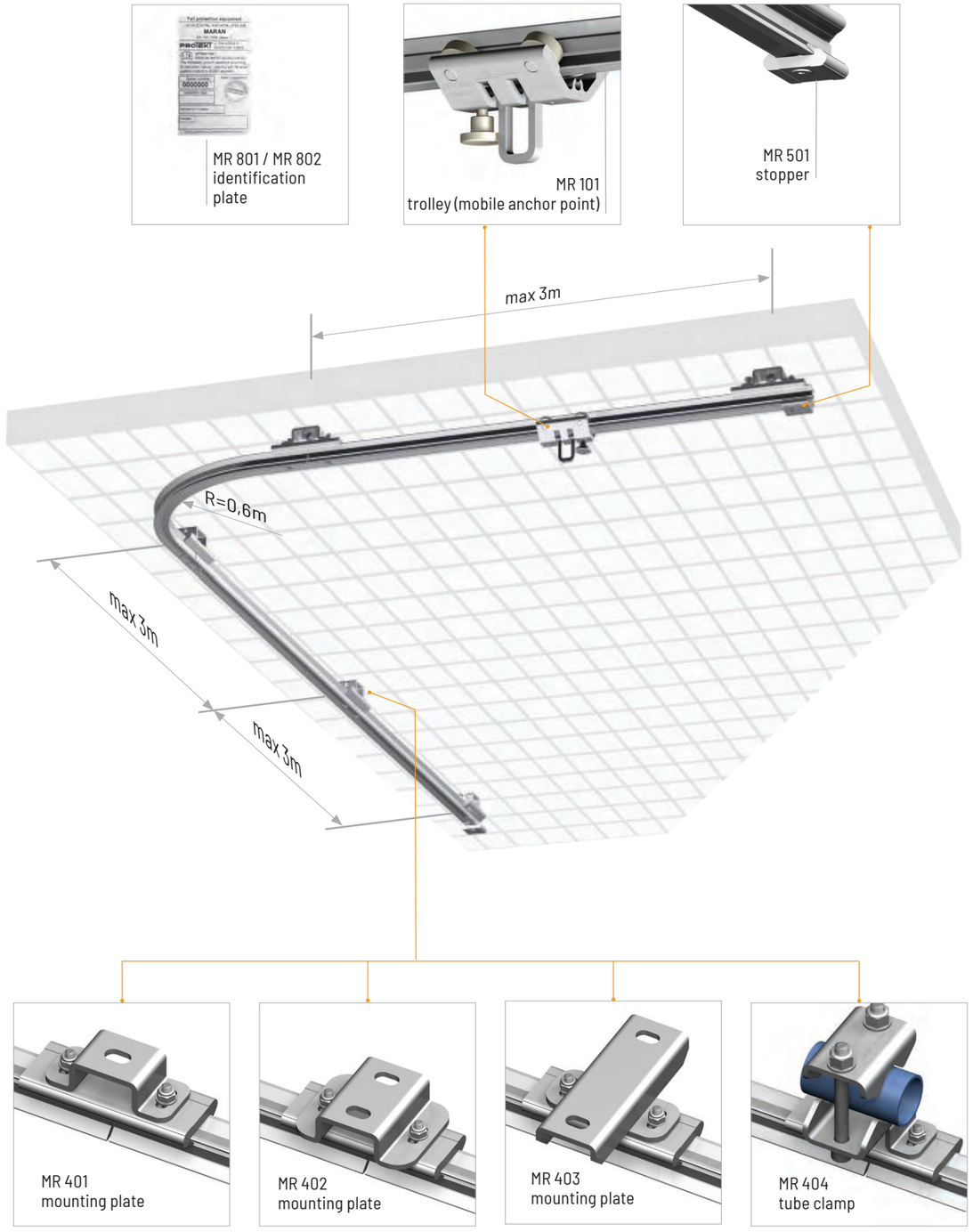

MARAN system components

Rail systems

MR 101
trolley

MR 201
rail

MR 202
horizontal bend

MR 204
vertical bend

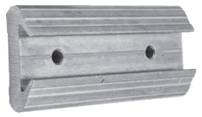

MR 301
connector

MR 302
reinforcement plate

MR 401
mounting plate

MR 402
mounting plate

MR 403
mounting plate

MR 404
tube clamp

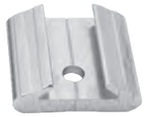

MR 501
stopper

MR 601
peg

MR 710
bolting

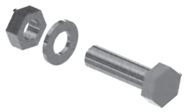

MR 720
bolting

MR 730
bolting

MR 802 / MR 801
informative plates
(stainless steel / PVC)

® Example configuration
of MARAN system on a wall.

System SKC-Block is designed to protect one person ascending and descending vertical ladders against fall from a height. The system can be installed on any type of fixed ladders onto structures such as chimneys, towers, silos, masts or buildings. The essential element within the system is a line grab, installed on a steel cable of 8 mm in diameter, connected to a front attachment D-ring on full body harness. General elements within the system such as cable, guided type mechanism, cable connector, steel bolt clamps and tensioner are all made of stainless steel. Permanent vertical anchorage system SKC-BLOCK is a guided type fall arrester with a rigid anchor line and an energy absorbing and connecting component according to EN 363. System SKC -BLOCK meets requirements of Regulation of the European Parliament 2016/425. The system comprises vertical anchor line made of stainless steel cable of 8mm in diameter. Lower end of the anchor line is equipped with a tensioner made of stainless steel. Upper end of the anchor line is mounted on a fixed structure by means of stainless steel connector AZ 090. Vertical anchor line of up to 10m in length is equipped with line guide-wire (ref. AC 921) to protect anchor line against vibrations caused by e.g. wind. Slide is user's personal equipment installed on anchor line if a fall protection system is to be used. The slide travels along the line up and down as with user's normal mobility, and in the case of user's fall it is locked on the line to arrest the fall.

Installation to a ladder

Line systems

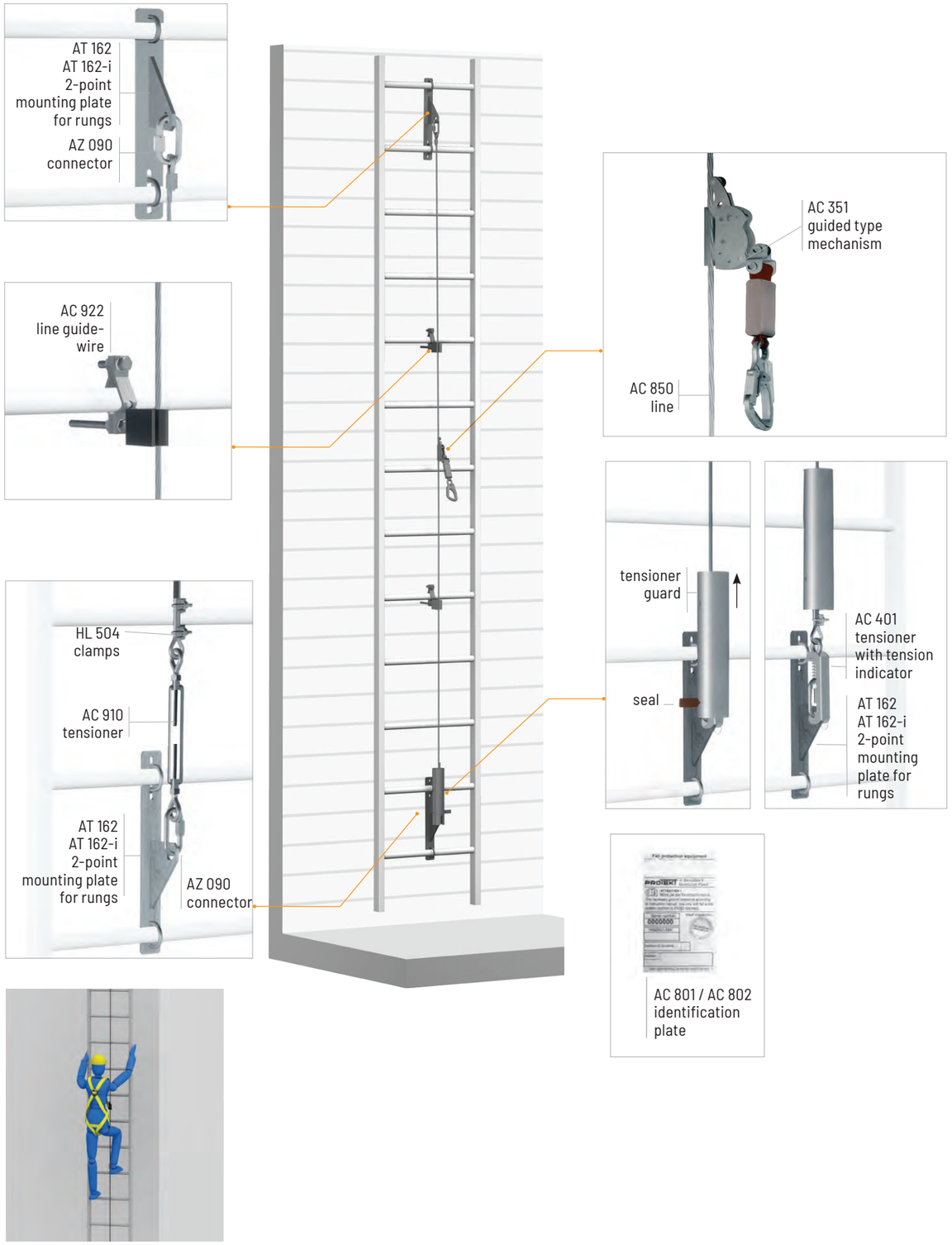

AC 360

Vertical anchor system for ladders.

Fall arrester with rigid anchor line – System AS 360 is designed to provide protection for max. 2 users at the same time during their mobility in the vertical. The device complies with EN 353-1. The system can be installed on any type of fixed ladders onto structures such as chimneys, towers, masts or buildings. The essential element within the system is a guided type mechanism, installed on a steel cable of 8 mm in diameter, connected to a front attachment D-ring on full body harness. General elements within the system such as cable, guided type mechanism, cable connector, steel bolt clamps and tensioner are all made of stainless steel. System AC 360 meets requirements of Regulation of the European Parliament 2016/425. The system comprises vertical anchor line made of stainless steel cable of 8mm in diameter (ref. AC 850). Upper end of the anchor line is equipped with an energy absorber (ref. AC 361 / AC 362). Lower end of the anchor line is equipped with a tensioner (ref. AC 910). Upper and lower ends of the anchor line are mounted securely on a fixed structure by means of connector AZ 090. Vertical anchor line with length of up to 10m is equipped with line wire-guide (AC 922) to protect anchor line against vibrations caused by e.g. wind. Slide (AC 360) is user's personal equipment installed on the anchor line if a fall protection system is to be used. The slide travels along the line up and down as with user's normal mobility, and in the case of user's fall it is locked on the line to arrest the fall.

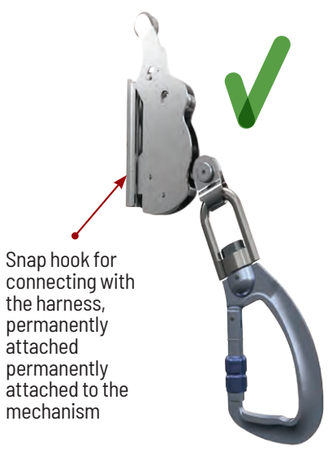

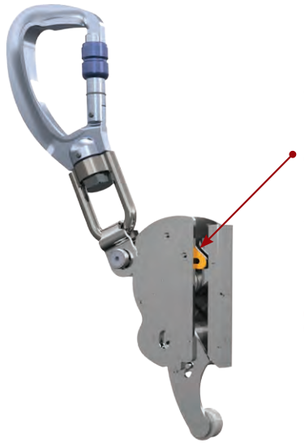

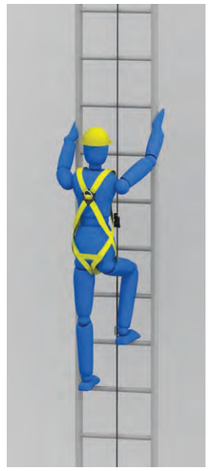

EXAMPLE CONFIGURATIONS OF SYSTEM ELEMENTS EXTENDED SYSTEM TO

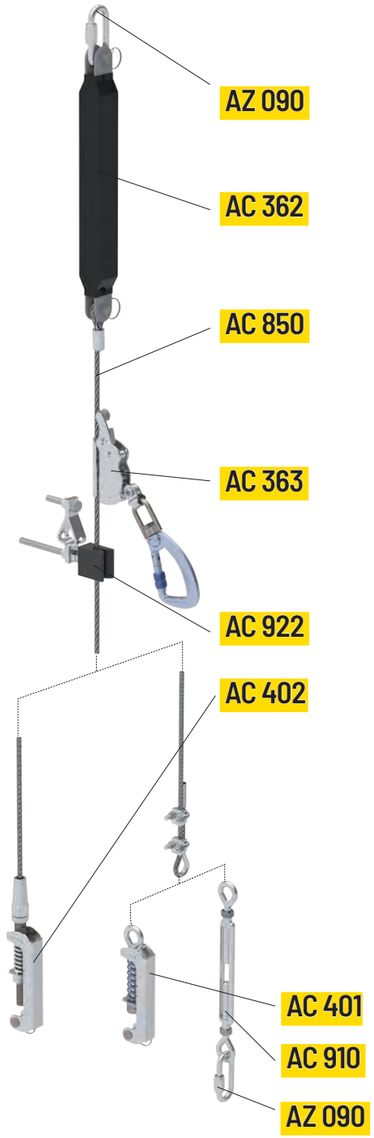

EXTENDED SYSTEM TO FOR EASY EXIT, E.G. TO THE ROOF

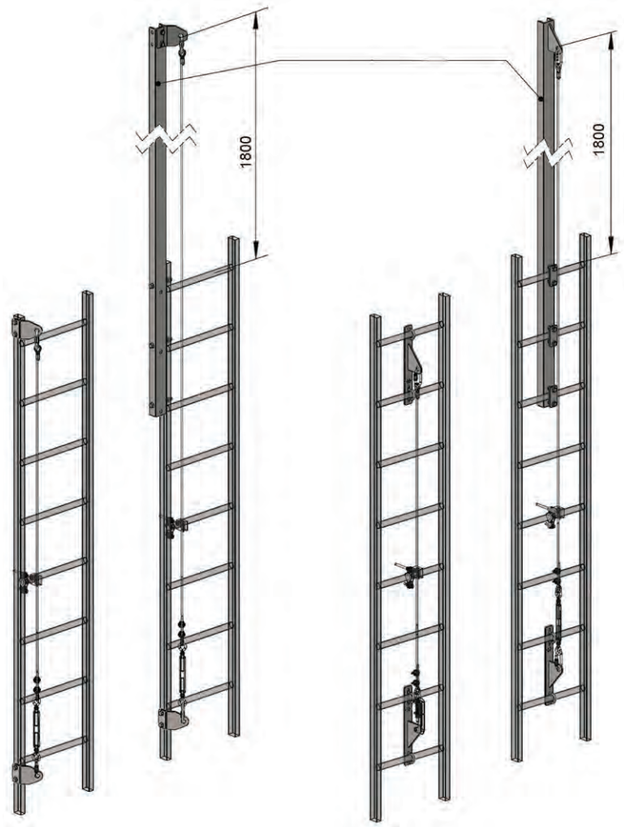

Side installation

Installation in ladder axis

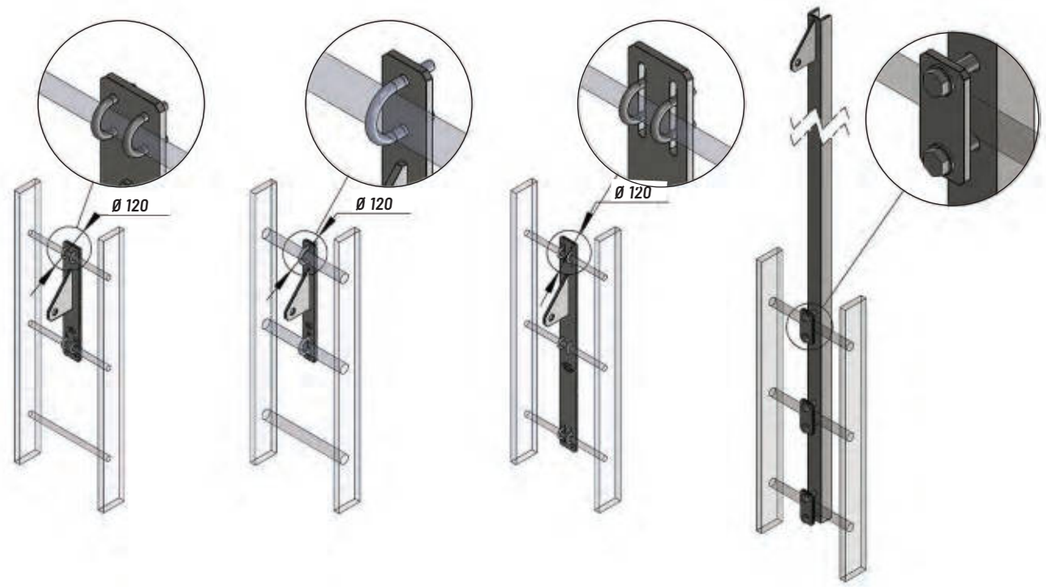

AT161 - Hot-dip galvanized steel

AT161i - Stainless steel

Rung dimensions:
AT 161 (Ø12 - Ø22)
(Ø12 - Ø18)
AT 161i (Ø14 - Ø22)
(Ø12 - Ø20)

AT162 - Hot-dip galvanized steel

AT162i - Stainless steel

Rung dimensions:
AT 162 (Ø20 - Ø63)
(Ø18 - Ø30)
AT 161i (Ø20 - Ø36)
(Ø20 - Ø32)

AT163 - Hot-dip galvanized steel

AT163i - Stainless steel

Rung dimensions:
AT 163 (Ø12 - Ø22)
(Ø12 - Ø18)
AT 163i (Ø14 - Ø22)
(Ø12 - Ø20)

AT165 - Hot-dip galvanized steel

Rung dimensions:
up to Ø55 mm

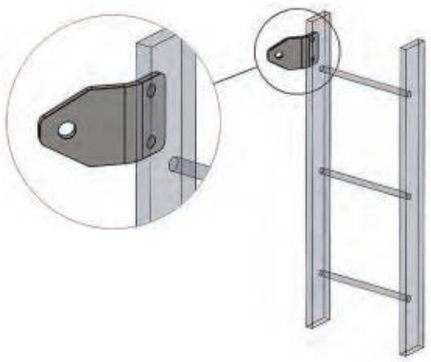

AT160 - Hot-dip galvanized steel
AT160i - Stainless steel

AT166 - Hot-dip galvanized steel

SKC - BLOCK system components

Line systems

AT 160 / AT 160-i
side mounting plate (galvanized steel / stainless steel)

AT 161 / AT 161 - i
4-point mounting plate for rungs (galvanized steel / stainless steel)

AT 162 / AT 162 - i
2-point mounting plate for rungs (galvanized steel / stainless steel)

AT 163 - i
6-point mounting beam for rungs (galvanized steel)

AT 165 / AT 165 - i
3-point mounting plate for rungs (galvanized steel / stainless steel)

AC 850
lanyard

AC 401
tensioner for 2 persons

AC 402
tensioner for 2 persons

AZ 090
connector (stainless steel)

AC 801 / AC 802
informative plates (stainless steel / PVC)

AC 351
guided type mechanism

AC 922
line guide-wire

AC 360 system components

Line systems

AT 160 / AT 160-i
side mounting plate (galvanized steel / stainless steel)

AT 161 / AT 161 - i
4-point mounting plate for rungs (galvanized steel / stainless steel)

AT 162 / AT 162 - i
2-point mounting plate for rungs (galvanized steel / stainless steel)

AT 163
6-point mounting beam for rungs (galvanized steel)

AT 165 / AT 165 - i
3-point mounting plate for rungs (galvanized steel / stainless steel)

AC 850
lanyard

AC 910
tensioner (stainless steel)

AC 922
line guide-wire

AZ 090
connector (stainless steel)

AC 363
mechanism
clamp-and-slide mechanism

AC 362
energy absorber for 2 users

AC 803 / AC 804
informative plates (stainless steel / PVC)

AC 402
tensioner for 2 persons

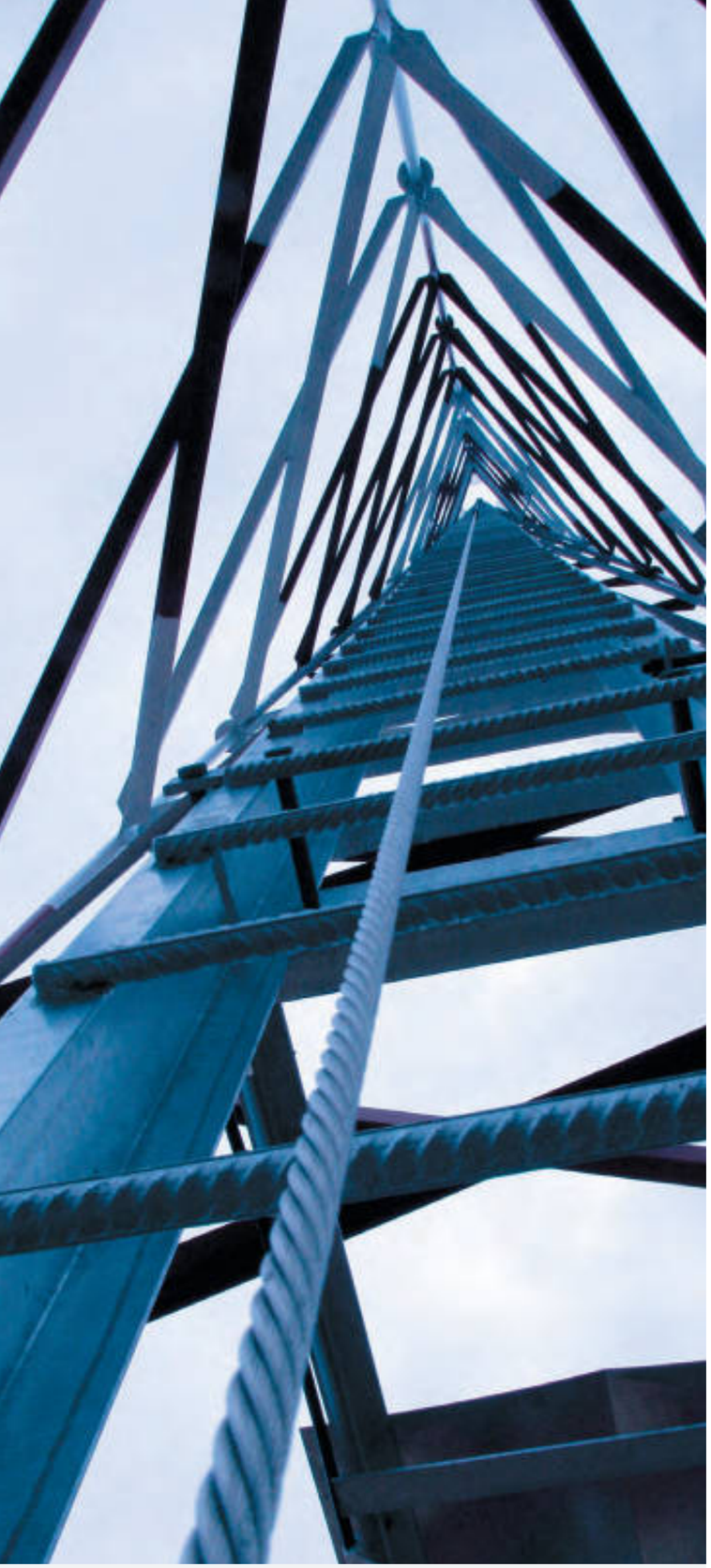

® **Example configuration of system SKC - BLOCK in ladder axis.**

AC 520

Mast ladder with integrated vertical anchorage system.

System AC 520 is a guided type fall arrester with a rigid anchor line, being an energy absorbing and connecting component according to EN 353. System AC 520 meets requirements of Regulation of the European Parliament 2016/425. The system comprises individual ladder segments connected to each other, and mounted directly on a building and connected rail segments mounted on an existing ladder. The ladder can be equipped with access lock as door made of stainless steel secured by a padlock. Due to application of the asymmetric rail, the trolley AC 501 can be installed in only one proper configuration. The trolley is equipped with webbing energy absorber with connector AXK 10 at the end which is to be connected to front anchor point on full body harness designed for arresting a fall (according to EN 361). The upper and lower ends of the system AC 520 are provided with segments with locks (with ratchet mechanism). They protect the trolley AC 501 against accidental sliding out of the rail. In order to remove the trolley from the rail take two independent steps: first, unlock and hold the ratchet (by pulling the lever at the back of the rail within the segment with lock) and then guide the trolley through the lock by removing it from the rail. Rail vertical anchorage system AC 520 can be used by 2 users at the same time. The trolley AC 501 does not require use of any additional fall arresters. The device can be used in sub-zero temperatures (up to -30°C).

Cross section of rail guide.

Application of an asymmetric section profile improves the safety while using the system. This solution disables improper installation of the trolley.

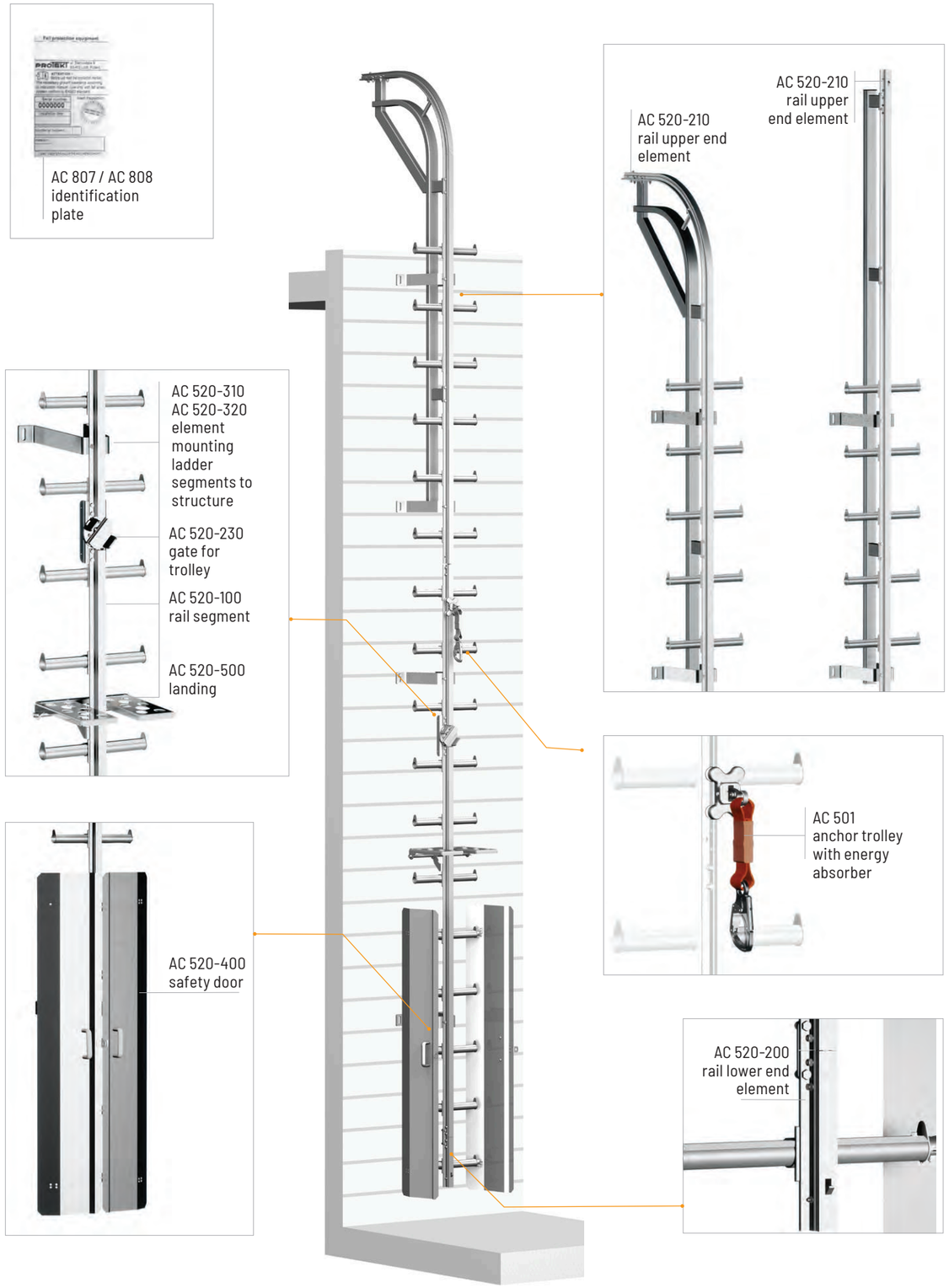

Mounting to ladder

Rail systems

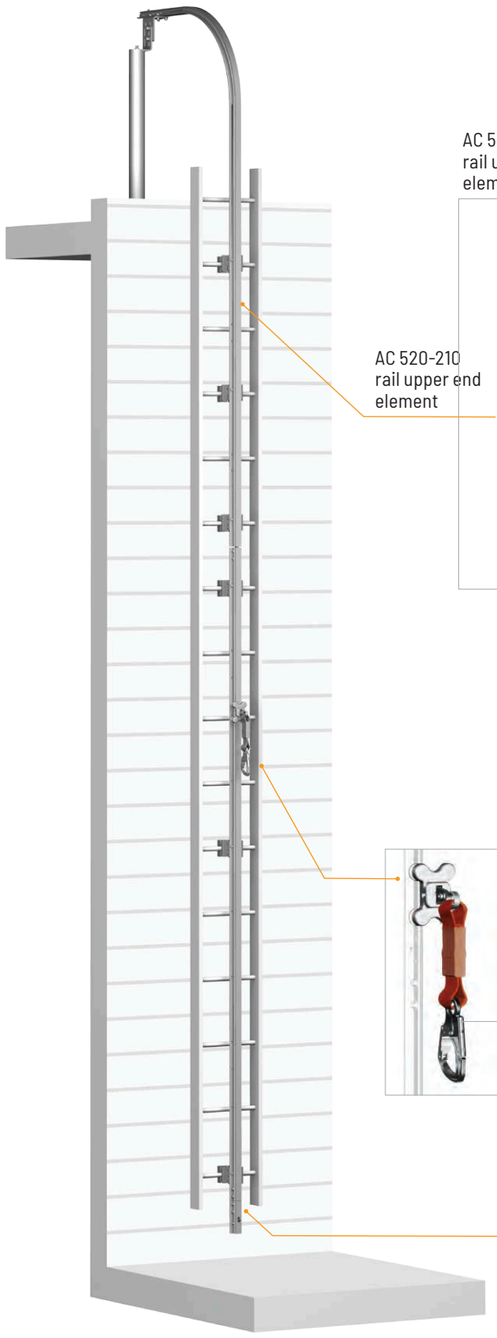

AC 520-210
rail upper end
element

Example of system
application in a well

AC 520-210
rail upper end
element

AC 501
Anchor trolley
with shock
absorber

AC 520-200
lower rail end piece
with lock

Mounting to masonry

Rail systems

Connection to a concrete surface should be made using chemical or mechanical anchors with a tensile strength of min.12kN.

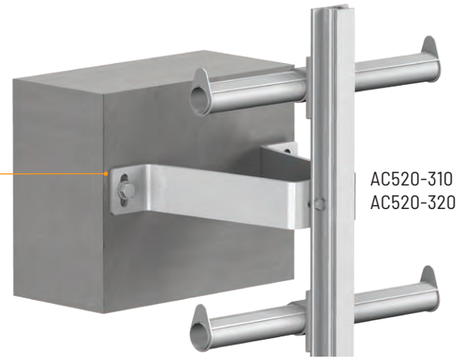

AC520-310
AC520-320

MECHANICALLY

CHEMICALLY

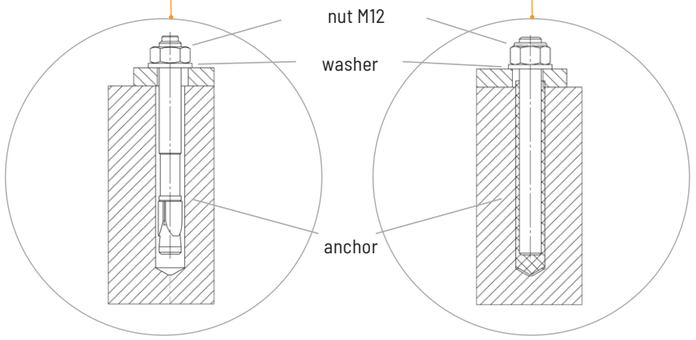

Compressive strength of the surface should be min. 25MPa. Strictly follow recommendations for installation given by manufacturers of respective anchors.

Mounting to posts

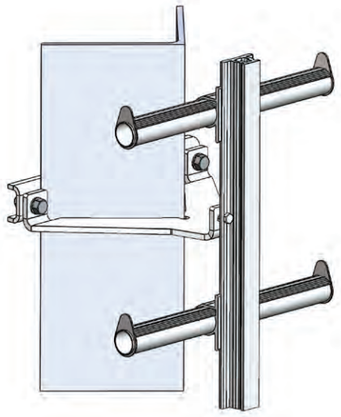

ANGLED PROFILE

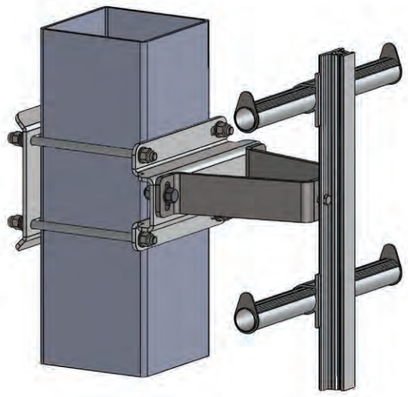

RECTANGULAR PROFILE

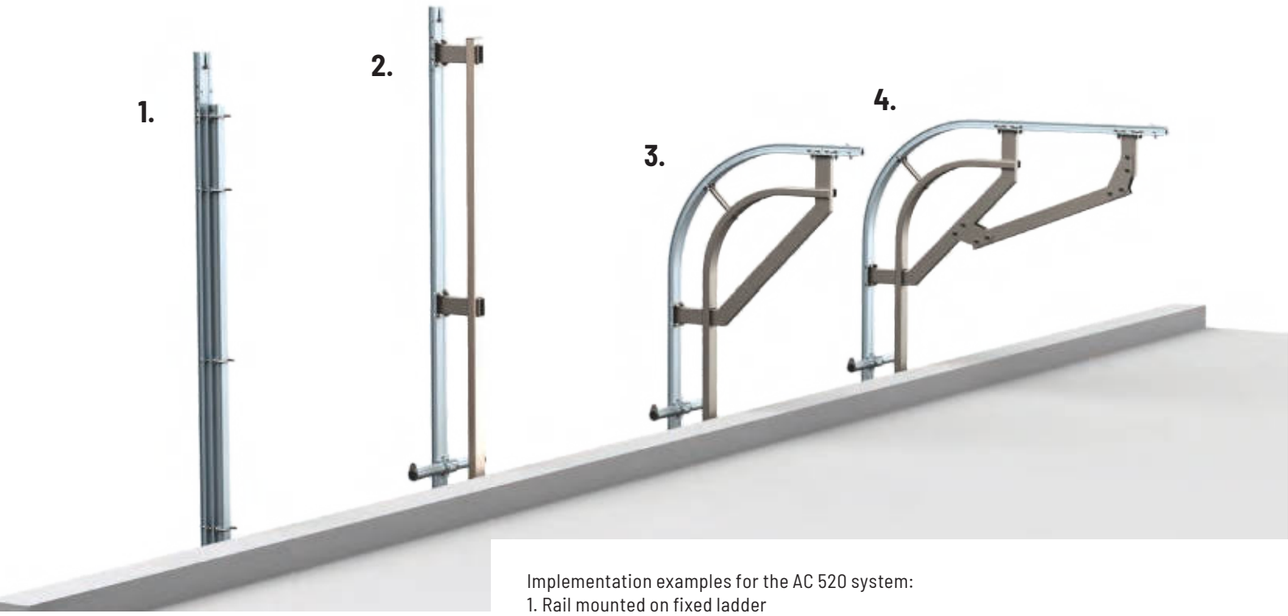

Implementation examples for the AC 520 system:
1. Rail mounted on fixed ladder
2. System with 2 built-in door sections with a total height of 3m (2x 1.5m)
3. System in configuration with 1 light door section and walkway with access to roof
4. System in a configuration with a staircase and an extended exit to the roof.

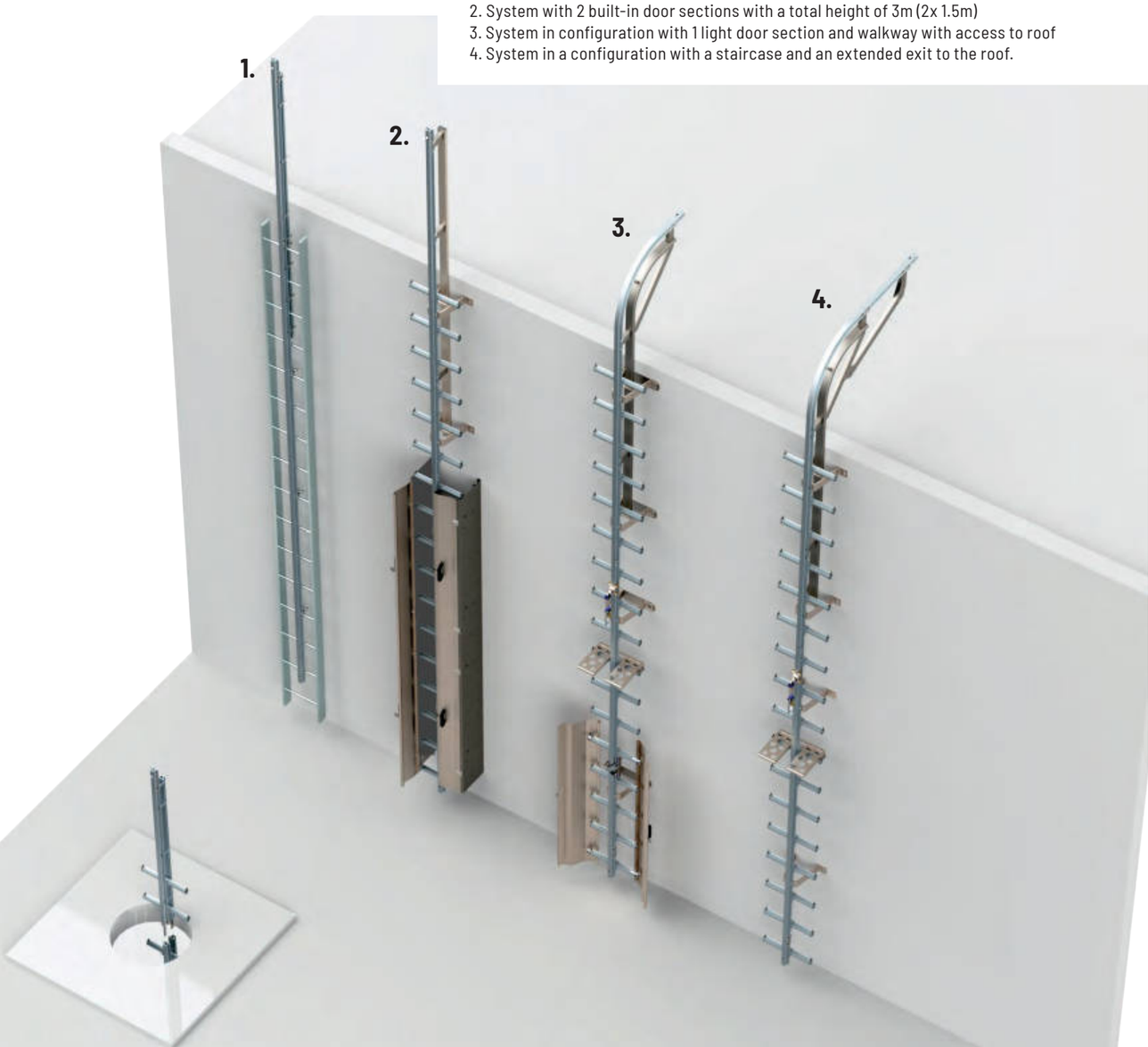

AC 520 system components

Rail systems

AC 520-100-H
ladder segment

(length H = 300; 270; 240; 210; 180; 150 cm)

AC 520-101-H
rail segment

(length H = 300; 240; 180; 120 cm)

AC 520-110

Ladder segment - straight exit onto roof.

AC 520-111

Rail segment: straight exit onto roof

AC 520-120

ladder segment (exit onto roof with bend)

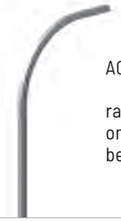

AC 520-121

rail segment (exit onto roof with bend)

AC 520-200

rail lower end segment

AC 520-210

rail and ladder upper end segment

AC 520-220
ladder lower end segment

AC 501

anchor trolley with energy absorber

AC 520-300

connector for inter-mediate segments

AC 520-310 / AC 520-320
elements for mounting lad-der segments on structure

AC 520-330
element for mounting rail AC 520-121 on post

AC 520-340
element for mounting rail AC 520-111 on rungs [ø10 - ø40]

AC 520-350
element for mounting rail (AC 520-101-H; AC 520-121) on rungs [ø10 - ø40]

AC 520-400
safety door

HL 704
support post for element AC 520-121

AC 520-230
gate for trolley in-stallation

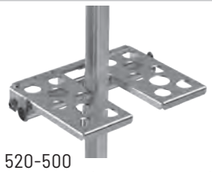

AC 520-500
line tensioner (stainless steel)

AC 807 / AC 808
informative plates
(stainless steel / PVC)

AC520-912-010

low support 109 mm

AC 520-341

universal coupler to rungs

AC 520-912-001

thrust plate made of steel stainless steel

AC 510

Aluminium caged ladder with two uprights.

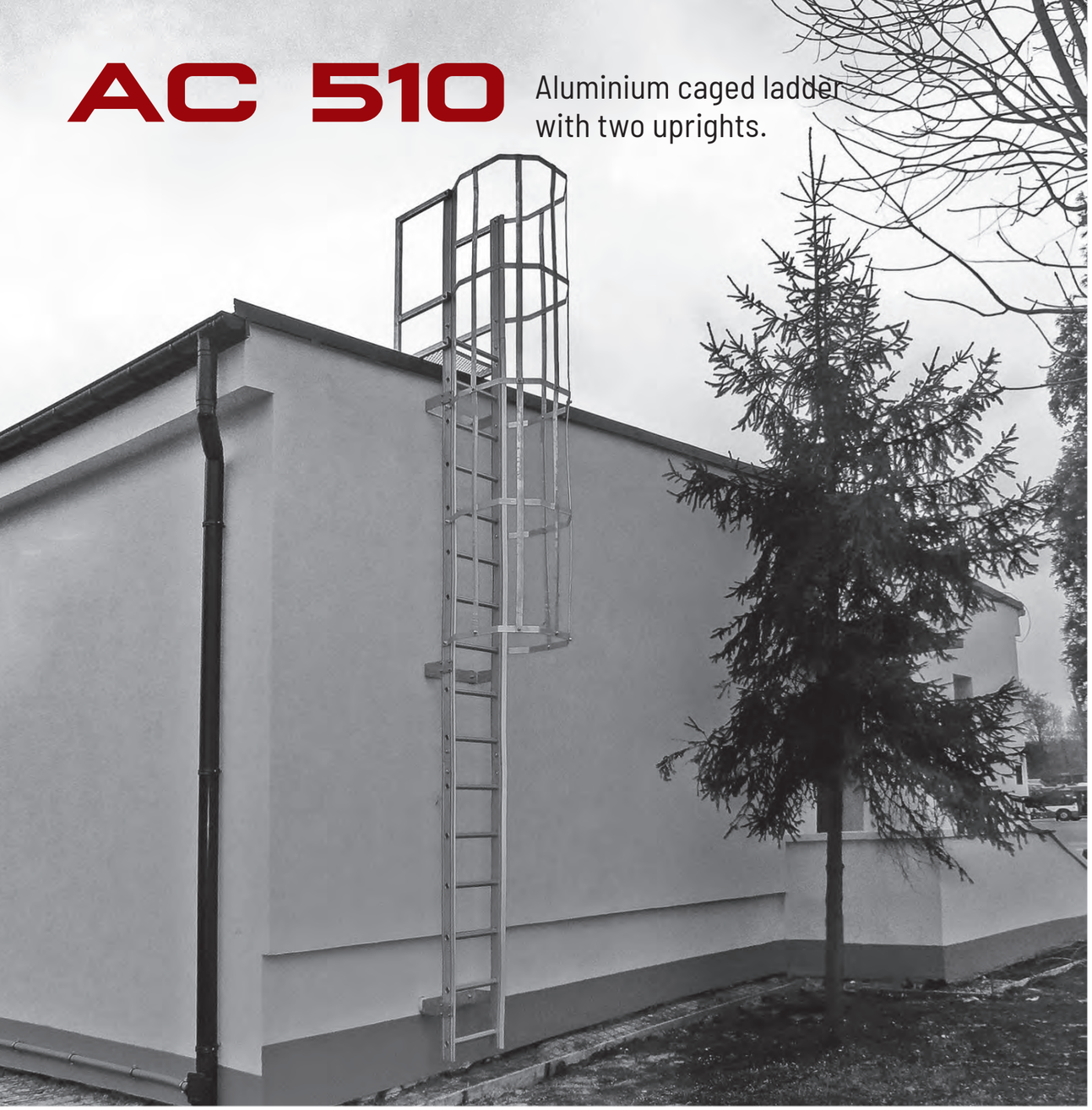

Caged ladder AC 510 conforms to: DIN 18 799-1: vertical ladders for inspection, maintenance and cleaning on civil structures. Designed for vertical mobility at various types of devices, buildings, engineering structures, etc.

Can be used at any location where it can be mounted on a fixed structure. Aluminium ladder with a cage providing protection against fall from a height. The ladder is made from aluminium profiles. The cage is made of steel, and as needed, either stainless or hot-dip galvanized steel can be used. Elements for mounting the ladder on fixed structures are made of stainless steel.

AC 510-320
platform for exit onto roof

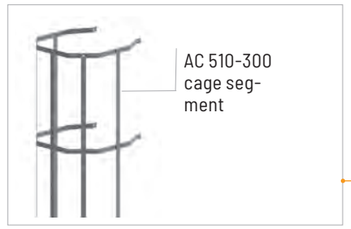

AC 510-300
cage seg-ment

AC 510-100
ladder segment

AC 809 / AC 810
identification plate

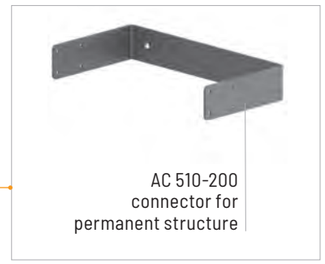

AC 510-200
connector for permanent structure

AC 510 system components

Caged ladder

AC 510-100
ladder segment

AC 510-200
support

AC 510-320
exit platform

AC 510-330
access lock

AC 510-300
cage segment

AC 510-310
cage rim

AC 810 / AC 809
informative plates
(stainless steel / PVC)

PROSAFE

Modular free-standing edge guard system.

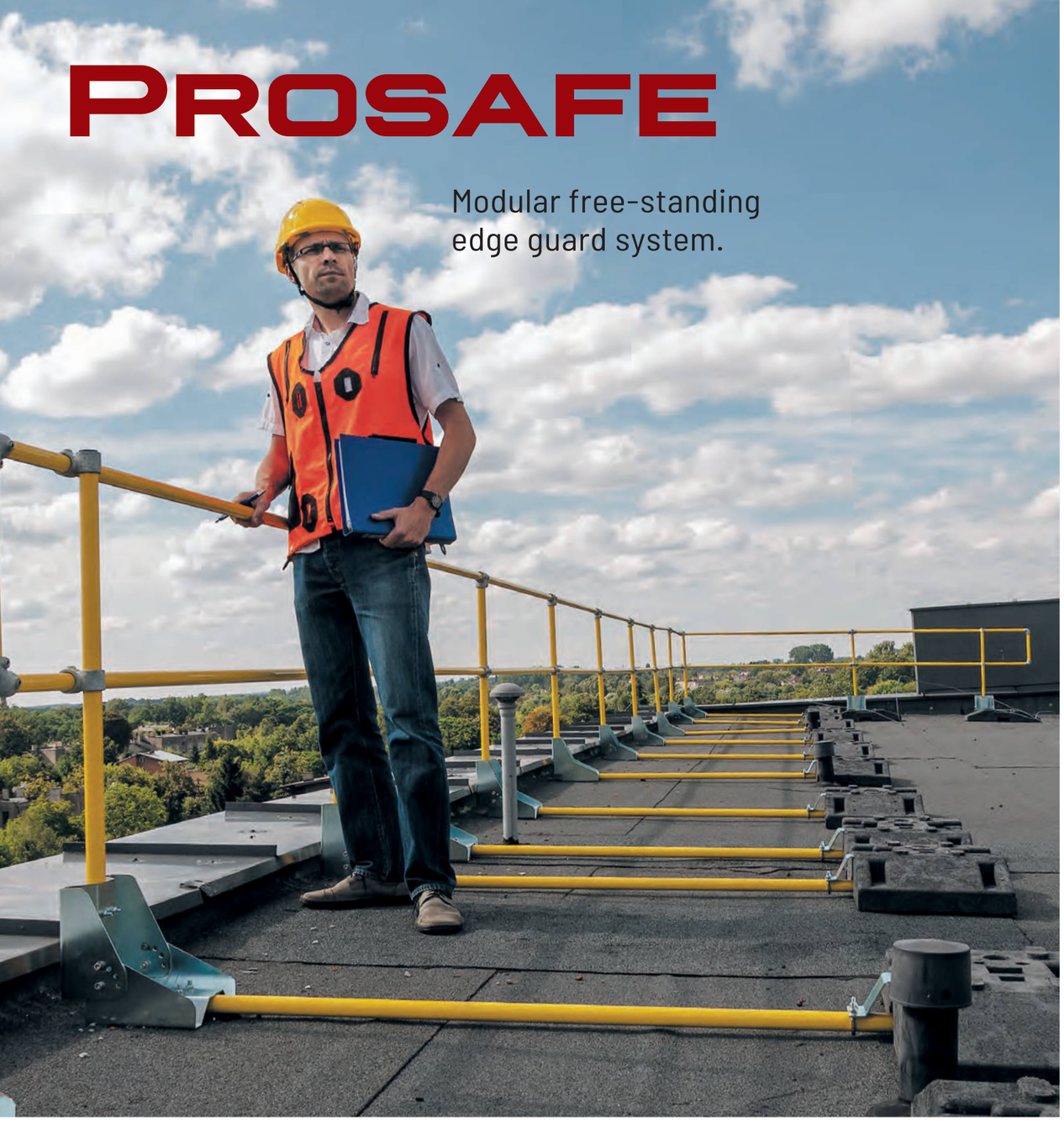

The railing system is based on counterweights made of plastic, and additionally equipped with anti-slip coating. Thanks to couplers the railings can be adopted to the roof, its curvature and difference in levels. The advantage of the modular railing system is easy handling of individual elements and simple mounting with use of only 5 types of couplers made of hot-dip galvanized steel. The heaviest element within the system weighs 24 kg, and length of the longest is 2 m. Couplers allow for arrangement of passages, gates, openings and also snow discharge areas. Owing to their versatility the railings can be adjusted to nearly any conditions. When the roof parapet is lower than 150mm, or open spaces are limited by railings, the system enables use of edge board to prevent user's feet from slipping and tools from rolling down beyond the edge.

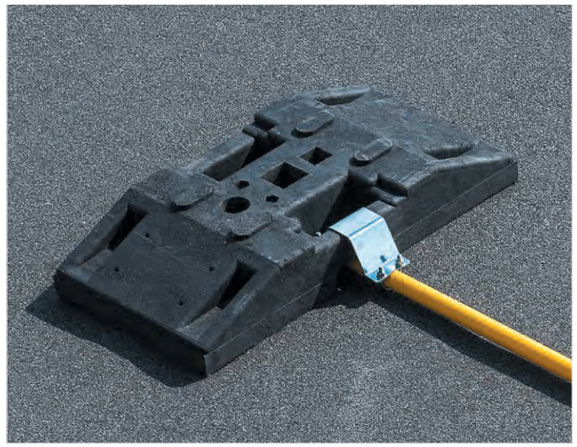

Weights

The railing system is based on counterweights made of plastic, and additionally equipped with anti-slip coating.

- Weight: 24kg
- Dimensions: 800x400x85
- Ergonomic carrying handle
- Available in black colour
- Made of recycled materials

Element connections

Thanks to couplers the railings can be adopted to the roof, its curvature and difference in levels. Couplers allow for arrangement of passages, gates, openings and also snow discharge areas. Owing to their versatility the railings can be adjusted to nearly any conditions.

Aluminium stoppers

When the roof parapet is lower than 150m, or open spaces are limited by railings, the system enables use of edge board to prevent worker's feet from slipping and tools from rolling down beyond the edge.

Example fencing of roof with parapet

Railing

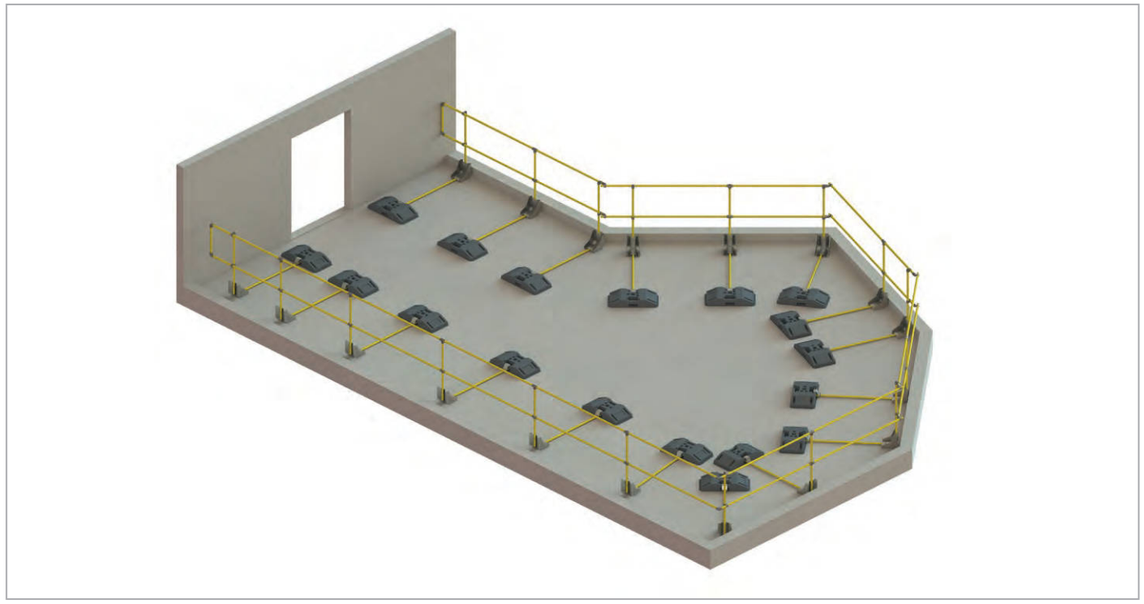

Diagram 1

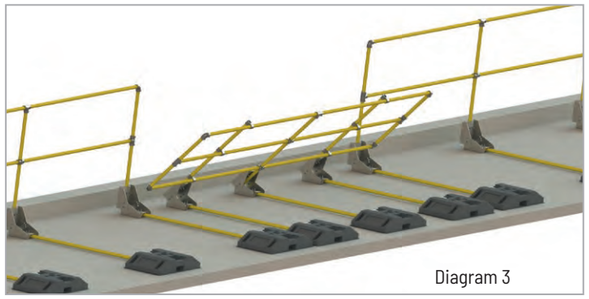

Diagram 3

Diagram 4

Advantages of system PROSAFE:

- Passages, opened gates (Diagram 4) and snow discharge areas (Diagram 3) can be arranged.
- Inclination angle of railings can be adjusted in 15° increments within 90° inclination from vertical.
- Modular design and small number of components.
- Railing sections can be disassembled and assembled for use in other locations.
- Weather-resistant elements in contact with roof are insulated from the ground by special pads.
- No interference in roofing while assembling.
- No need of welding, bending and other fitting works on the site.

Assembly of connections with the use of a single Allen wrench.

Assembly of the remaining elements with the use of a single flat wrench.

Protection of service openings

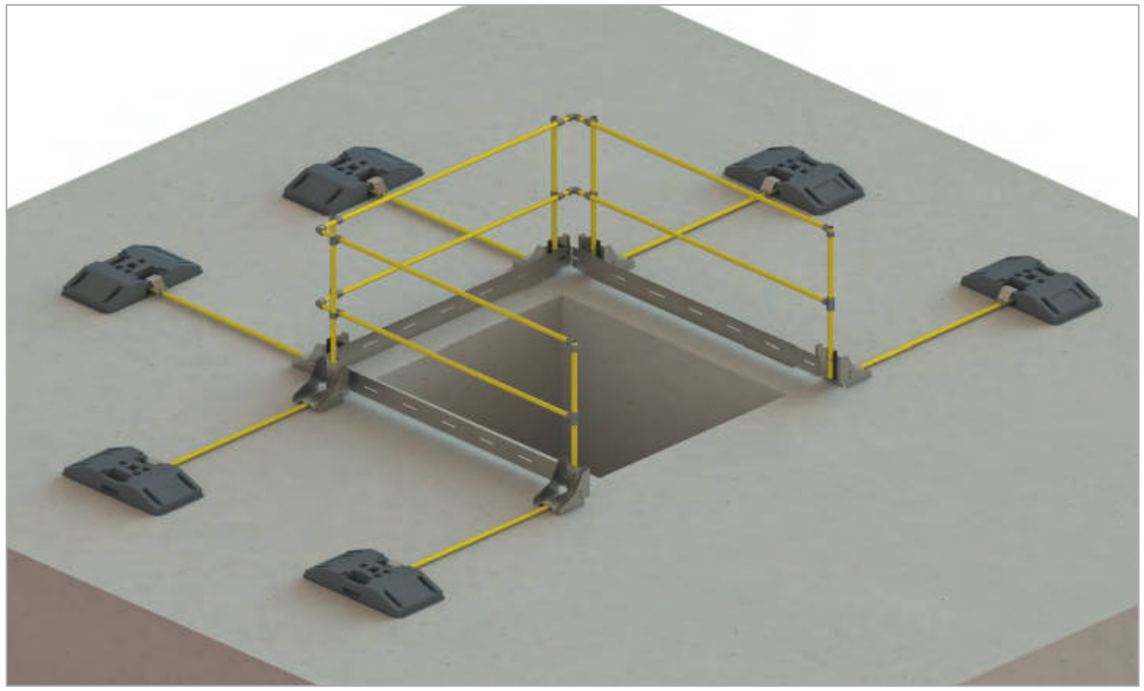

Diagram 2

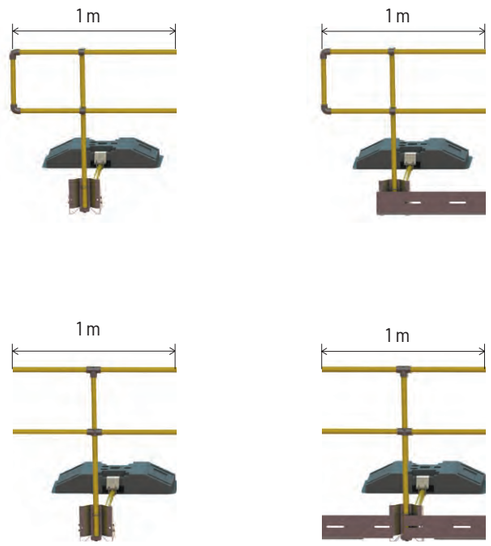

Technical data:

Maximum span length	2 m
Length of counterweight	1,5 m
Railing height	1,1 m
Max. space between railings	0,5 m
Weight of counterweight	24 kg
Length of the longest element	2 m
Minimum compressive strength of surface	0,6 kN/m²
Design loads applied to upper railing	300 N/m
Diameter of railings and posts	33,7 mm

Possible use on many types of surfaces

Assembly does not require any special tools nor qualifications.

PROSAFE system components

Railing

AT 240-003
elbow

AT 240-002
perpendicular coupler

AT 240-004
T-coupler

AT 240-001
cross coupler

AT 240-005
hinge coupler

AT 240-014
railing base
(hot-dip galvanized steel)

AT 240-014i
railing base (stainless steel)

AT 240-015
weight mounting
(hot-dip galvanized steel)

AT 240-015i
weight mounting (stainless steel)

AT 240-020
rubber pad for weight

AT 240-021
rubber pad for base

AT 240-018
edge board 2 m

AT 240-019i
connecting element for edge board

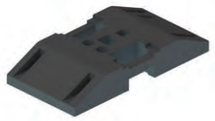

AT 240-017
railing weight

AT 240-016
inner clamp

® **Example configuration of PROSAFE system.**

AT 242

Skylight security system.

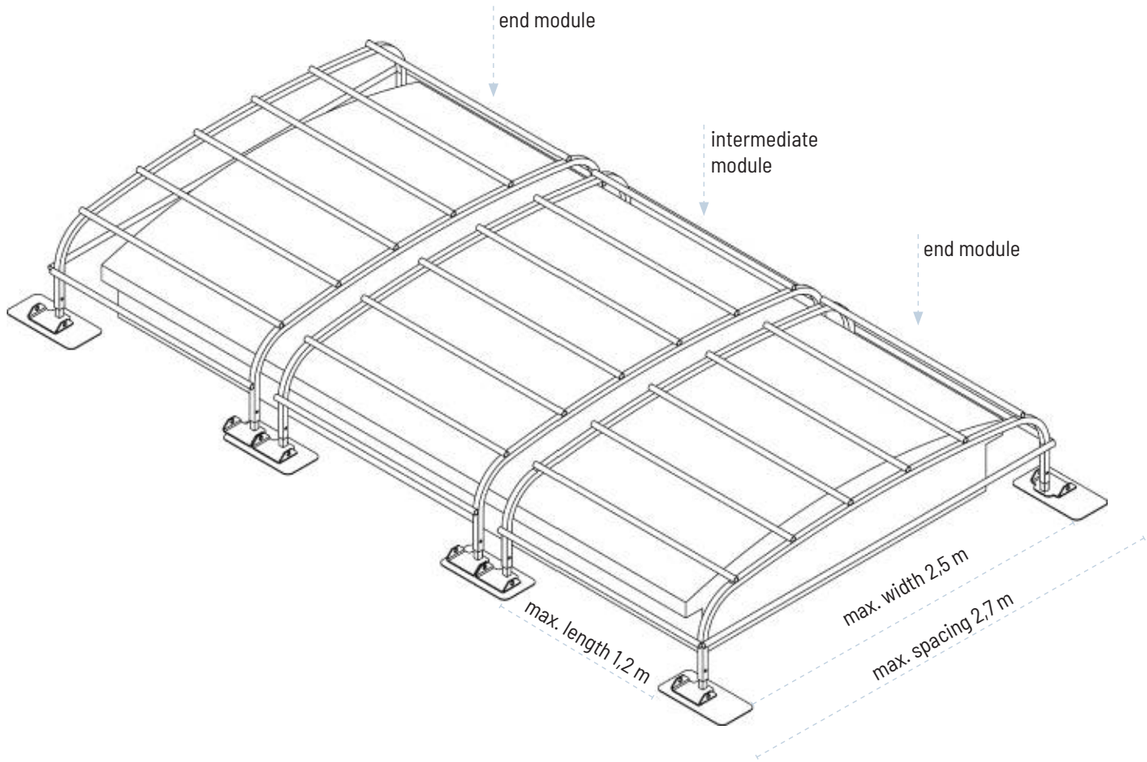

AT 242 is a system of fall protection grids (protection of skylights on flat and sloping roofs up to 15°) Installation without interfering with the roof sheathing - freestanding. The AT 242 system consists of intermediate modules and end modules with a maximum length of 1.2 m and a width of 2.5 m and legs with adjustable height.

Material:	hot-dip galvanized steel
Ability to absorb the kinetic energy of the fall: :	1400 J
Max. width of the protected skylight: Max. length of the protected skylight:	2,5 m 1,2 m
Length:	without limits
Height:	adjustable

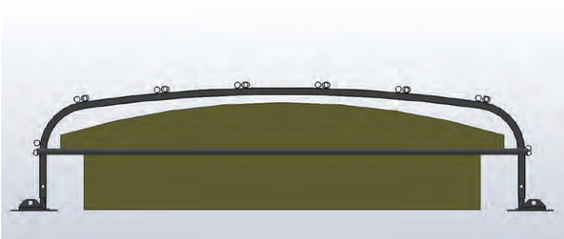

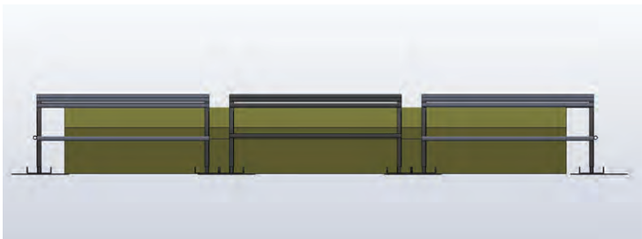

Skylight security system

ANCHOR MASS

Protection for 1 users

ANCHOR MASS IM 101

EN 795:2012 TYP E CE

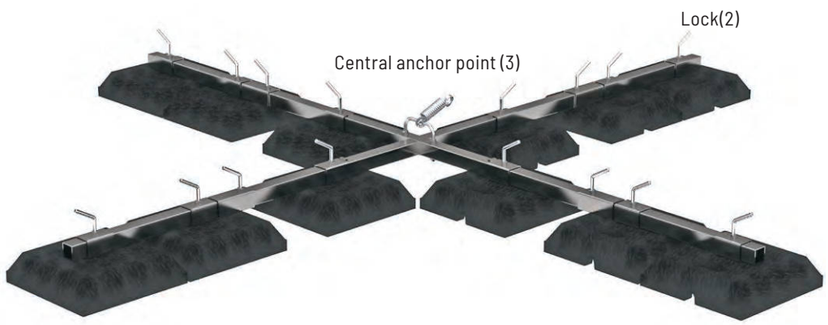

Material:	hot-dip galvanized steel, rubber
Total weight:	220 kg
Weight of the weight:	16 kg
Dimensions:	1550 x 1550 x 260 mm

1. Load segments of the anchor mass
2. End lock
3. Central anchor point

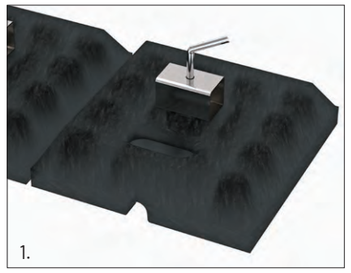

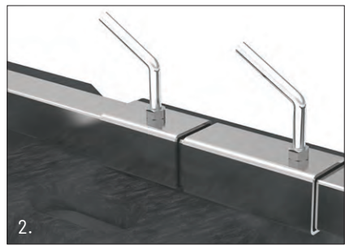

Protection for 1 user

ANCHOR MASS IM 100

EN 795:2012 TYP E CE

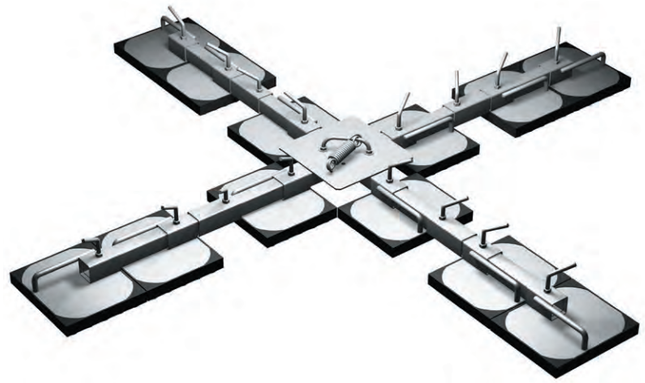

Material:	hot-dip galvanized steel, rubber
Total weight:	260 kg
Weight of the weight:	18,5 kg
Dimensions:	2124 x 2124 mm

The IM 100 mass is a portable anchor point for use on a flat roof with sufficient load capacity. It consists of 12 elements (weights) and the main cross with an attachment point. Place the IM 100 in such a way that it lies exactly on the roof surface.

Protection for 2 users

ANCHOR MASS IM 200

EN 795:2012 TYP E CE
EN/TS 16415:2013

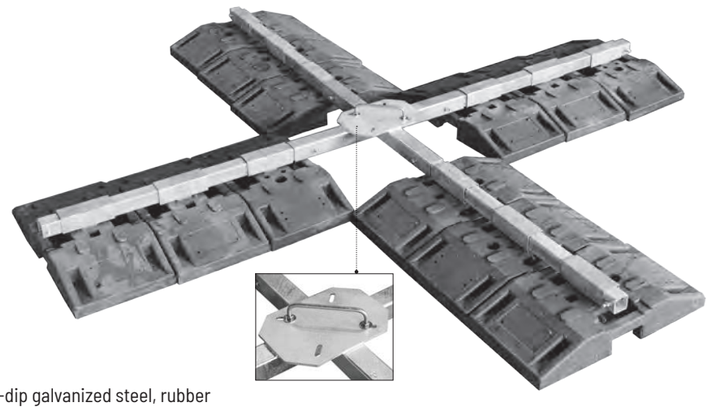

Material:	hot-dip galvanized steel, rubber
Total weight:	367 kg
Weight of the weight:	25,5 kg
Dimensions:	3020,5 x 3020,5 x 400 mm

The IM 200 mass is a portable anchor point for use on a flat roof with sufficient load capacity. It consists of 12 elements (weights) and the main cross with the PROTON I post (300 mm) mounted. The IM 200 must be positioned so that it is flush against the roof surface.

® Example configuration of PRIM system.